Refrigerant R410A
INVERTER

DTW_1SP003E_02

DESIGN & TECHNICAL MANUAL

Comfort series (Single phase type)

WATERSTAGE™

INNOVATIVE SOLUTION OF DOMESTIC HEATING

Air to Water
Split type

FUJITSU GENERAL LIMITED

CONTENTS

1. OUTDOOR UNIT

SINGLE PHASE TYPE : WO∗A060LDC, WO∗A080LDC, WO∗A100LDT

2. HYDRAULIC UNIT

SINGLE PHASE TYPE: WS∗A050DD6, WS∗A100DD6

3. CONTROL SYSTEM

WS∗A050DD6, WS∗A100DD6 (Hydraulic unit)

1. COMBINATIONS

Class	OUTDOOR UNIT	HYDRAULIC UNIT
5.0 kW	WO∗A060LDC	WS∗A050DD6
6.0 kW	WO∗A060LDC	WS∗A100DD6
8.0 kW	WO∗A080LDC	WS∗A100DD6
10.0 kW	WO∗A100LDT	WS∗A100DD6

Refrigerant R410A INVERTER

WATERSTAGE™

1. OUTDOOR UNIT

SINGLE PHASE TYPE :

WO*A060LDC
WO*A080LDC
WO*A100LDT

DTW_1SP003E_02--CHAPTER01
2013.2.28

OUTDOOR UNIT
WO*A060-100LD

CONTENTS

1. OUTDOOR UNIT

1. FEATURES ..... OU01 - 01

2. SPECIFICATIONS ..... OU01 - 04
2-1. NOMINAL CAPACITY AND NOMINAL INPUT ..... OU01 - 04
2-2. TECHNICAL SPECIFICATIONS ..... OU01 - 05
2-3. ELECTRICAL SPECIFICATIONS ..... OU01 - 06

3. DIMENSIONS ..... OU01 - 07
3-1. DIMENSIONAL DRAWING ..... OU01 - 07
3-2. INSTALLATION PLACE ..... OU01 - 09

4. PIPING DIAGRAM ..... OU01 - 10

5. WIRING DIAGRAM ..... OU01 - 11
5-1. WIRING DIAGRAM ..... OU01 - 11

6. CAPACITY TABLES ..... OU01 - 14
6-1. HEATING CAPACITY ..... OU01 - 14
6-2. COOLING CAPACITY * ..... OU01 - 18

7. OPERATION NOISE ..... OU01 - 22
7-1. NOISE LEVEL CURVE ..... OU01 - 22
7-2. SOUND LEVEL CHECK POINT ..... OU01 - 23

8. OPERATION RANGE ..... OU01 - 24

9. SAFETY DEVICES ..... OU01 - 25

10. STANDARD ACCESSORIES ..... OU01 - 26

OUTDOOR UNIT
WO∗A060-100LD

1. FEATURES

■ MODELS :

WO∗A060LDC
WO∗A080LDC
WO∗A100LDT

WO∗A060LDC
WO∗A080LDC

WO∗A100LDT

■ HIGH PERFORMANCE

● High efficiency & Comfort

High COP

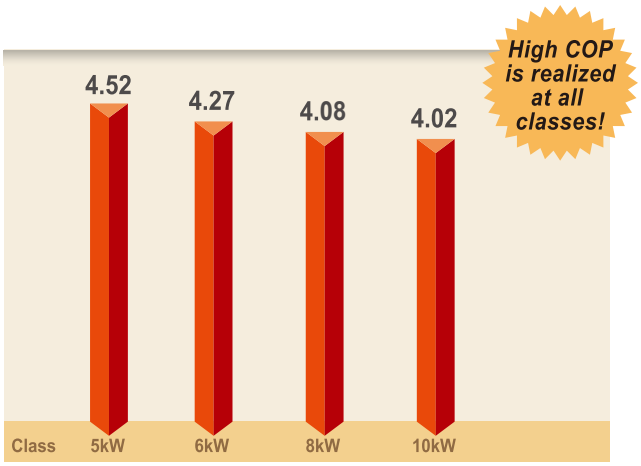

Optimized hot water control is realized by DC inverter technology.

Split Type model allows flexible installations.

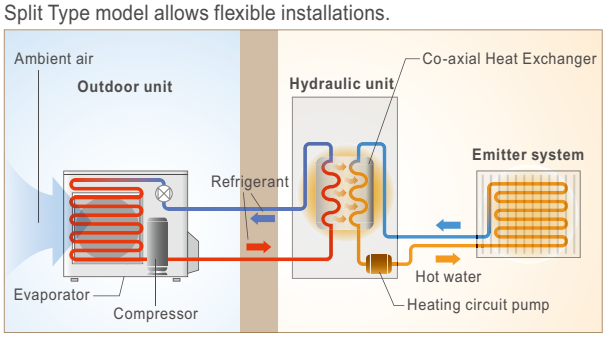

OUTDOOR UNIT
WO∗A060-100LD

High leaving water temperature

Maximum leaving water temperature is 55°C without backup heater. Hot water supply temperature can be maintained even at –7°C outdoor temperature.

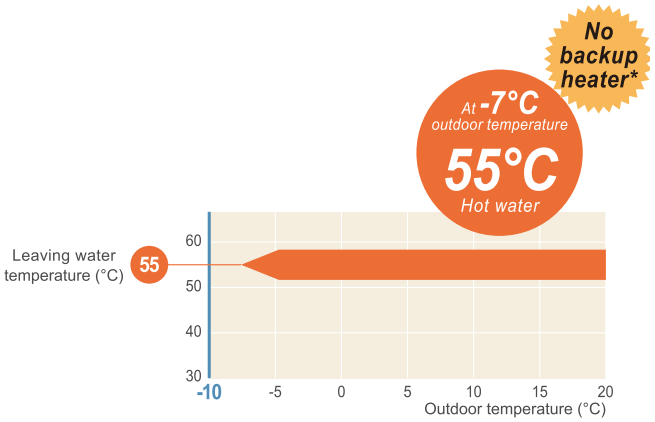

* If you want to raise the hot water supply temperature, backup heater can be used for the auxiliary operation.

Wide operation range

Possible to operate heating under -20°C outdoor temperature

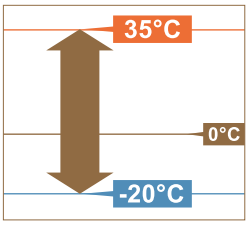

OUTDOOR UNIT
WO∗A060-100LD

■ WIDE COMFORT

Wide comfort by WATERSTAGE

The clean energy produced by WATERSTAGE reliably delivers “comfort” to diverse spaces in the home up to the living room, bedrooms, bath and swimming pool.

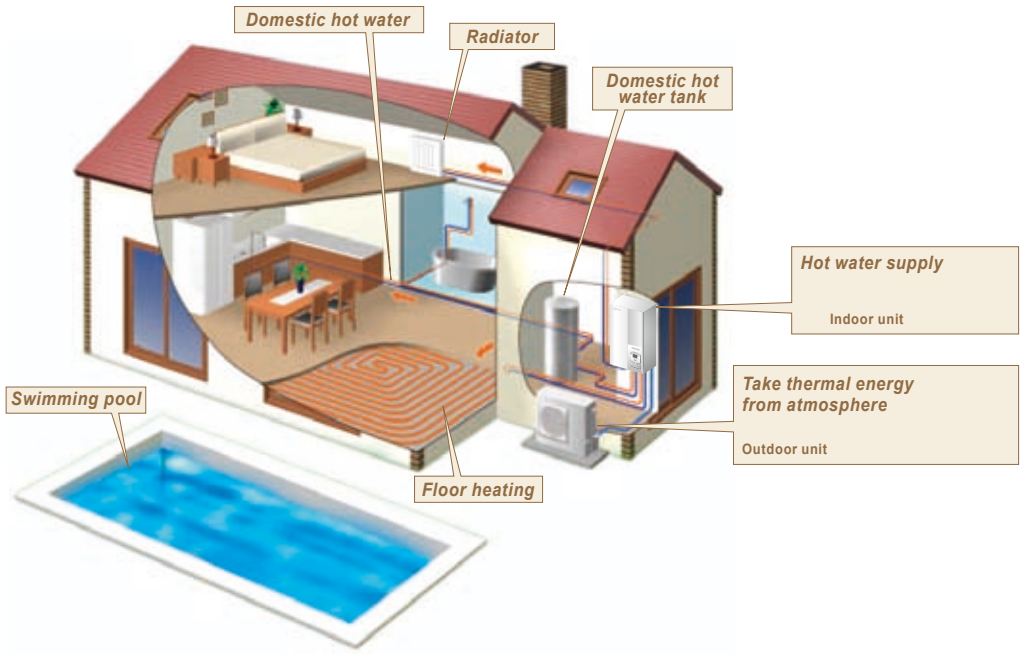

● System configuration

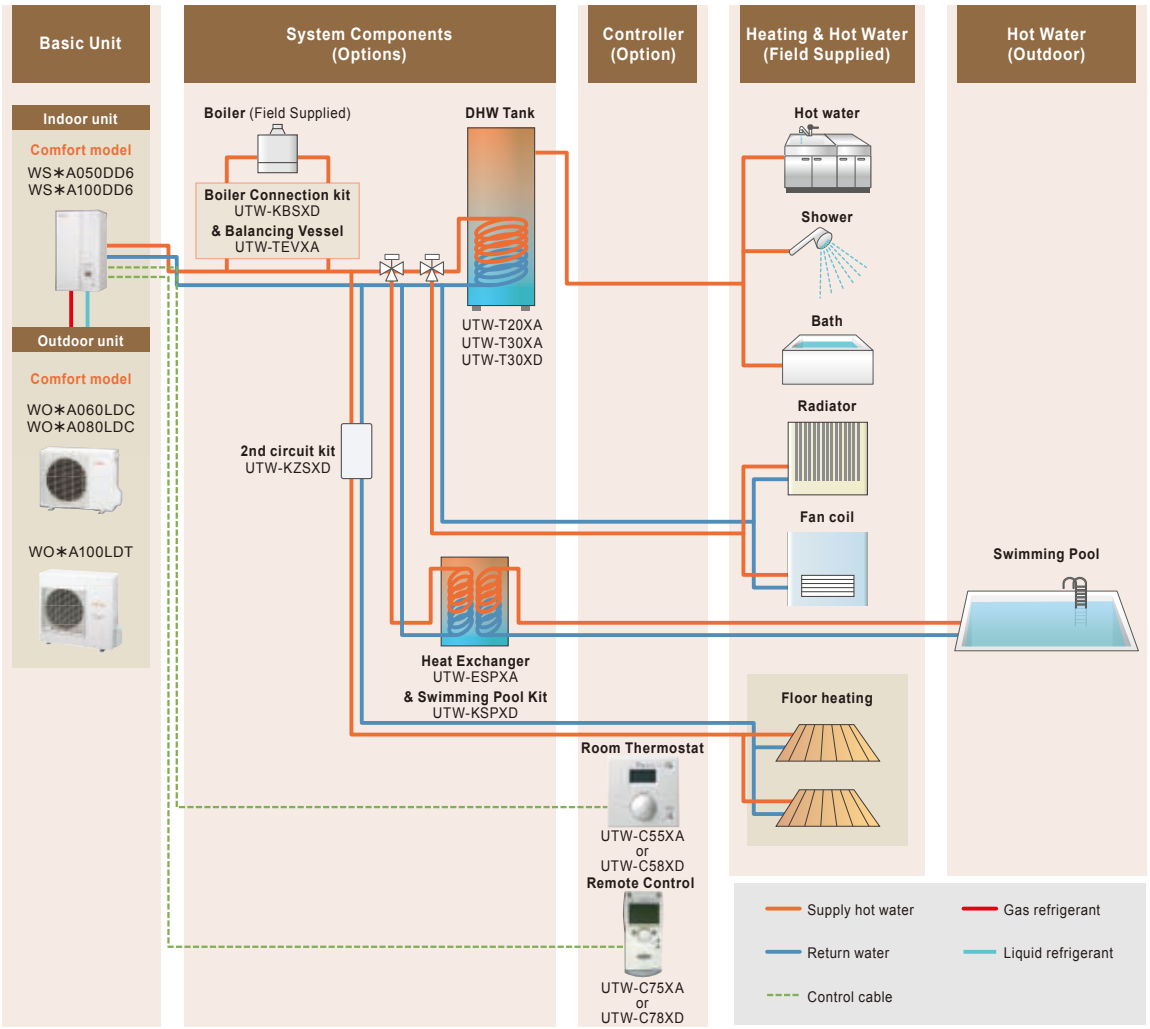

OUTDOOR UNIT
WO∗A060-100LD

2. SPECIFICATIONS

2-1. NOMINAL CAPACITY AND NOMINAL INPUT

Model name (Outdoor unit)				WO∗A060LDC		WO∗A080LDC	WO∗A100LDT
POWER SOURCE				1Ø 230V/50Hz			
+7°C/+35°C floor heating	Heating capacity	Minimum	kW	1.75	1.75	1.75	3.20
		Nominal		4.50	6.00	7.50	10.00
		Maximum		7.02	7.83	9.20	13.45
	Input power	Nominal		0.996	1.41	1.84	2.49
	COP		-	4.52	4.27	4.08	4.02
+7°C/+45°C floor heating	Heating capacity	Nominal	kW	4.50	5.10	6.20	8.27
	Input power			1.30	1.50	1.87	2.53
	COP		-	3.46	3.40	3.31	3.27
+2°C/+35°C floor heating	Heating capacity	Nominal	kW	4.50	4.95	5.65	7.70
	Input power			1.39	1.53	1.78	2.47
	COP		-	3.24	3.24	3.17	3.12

* Test conditions comply with EN14511-2

OUTDOOR UNIT
WO∗A060-100LD

2-2. TECHNICAL SPECIFICATIONS

Model name (Outdoor unit)				WO∗A060LDC	WO∗A080LDC	WO∗A100LDT
Enclosure	Colour			BEIGE Apporoximate colour of MUNSELL 10YR 7.5/1.0		
	Material			Steel sheet		
Dimensions (H x W x D)	Net		mm	620 × 790 × 290		830 × 900 × 330
	Gross			712 × 935 × 400		970 × 1050 × 445
Weight	Net		kg	41	42	60
	Gross			45	45	67
Heat exchanger type	Dimensions (H x W x D)		mm	588 × 881 × 36.4	Main: 588 × 881 × 36.4 Sub: 546 × 580 × 18.2	798 × 900 × 36.4
	Fin pitch			1.3	1.45	1.3
	Rows & Stages			2 × 28	Main: 2 × 28 Sub: 1 × 26	2 × 38
	Pipe type			Copper		
	Fin	Type (Material)		Corrugate (Alminium)		
		Surface treatment		Corrosion resistance	Corrosion resistance (Blue fin)	
Fan	Airflow rate	Heating	m³/h	2070	2340	3600
	Type x Q'ty			Proppeller fan ×1		
	Discharge direction			Horizontal		
	Motor Quantity			1		
	Motor output		W	40	115	100
Compressor	Type x Q'ty			DC 2 rotary × 1		
	Motor output		W	1100	1100	2100
Operation range	Heating	Min	°CDB	-20		
		Max	°CWB	35		
	Sanitary water	Min	°CDB	-20		
		Max	°CWB	35		
Sound pressure level	Heating		dBA	51	56	55
Refrigerant	Type			R410A		
	Charge		g	1100	1400	1800
	Control			Expansion valve (electric type)		
	Nr of circuits			1		
Refrigerant oil	Type			POE (RB68)		
	Charged volume		l	0.6		0.8
Connection pipe	Type	Liquid		Flare connection		
		Gas		Flare connection		
	Size (Standard)	Liquid	mm	Ø 6.35		Ø 9.52
		Gas		Ø 12.70	Ø 15.88	
	Pre-charge length		m	15		
	Max. length			20		
	Min. length			5		
	Additional refrigerant charge		g/m	20		40
	Max. height difference		m	15		
Defrost method				Reverse cycle		
Defrost control				Outdoor heat exchanger temperature sensor		
Capacity control method				Inverter control		

OUTDOOR UNIT
WO∗A060-100LD

2-3. ELECTRICAL SPECIFICATIONS

Model name (Outdoor unit)				WO∗A060LDC	WO∗A080LDC	WO∗A100LDT
Available voltage range				198-264V		
Power supply	Voltage		V	230		
	Frequency		Hz	50		
*1) Max. operating current	Heating		A	12.5	17.5	18.5
*2) Wiring spec.	Main fuse (Circuit breaker) Current			20		30
	Power cable		mm²	3.5-4.0		
Wiring connections	For power supply	*3) Quantity		3		
	For connection with indoor			4		

*1) The maximum current is the total current of indoor unit and outdoor unit.
*2) Wiring spec. :
Selected sample
(Selected based on Japan Electrotechnical Standard and Codes Committee E0005)
*3) Included earth wiring.

OUTDOOR UNIT
WO∗A060-100LD

3. DIMENSIONS

3-1. DIMENSIONAL DRAWING

■ MODELS : WO∗A060L, WO∗A080L

(Unit : mm)

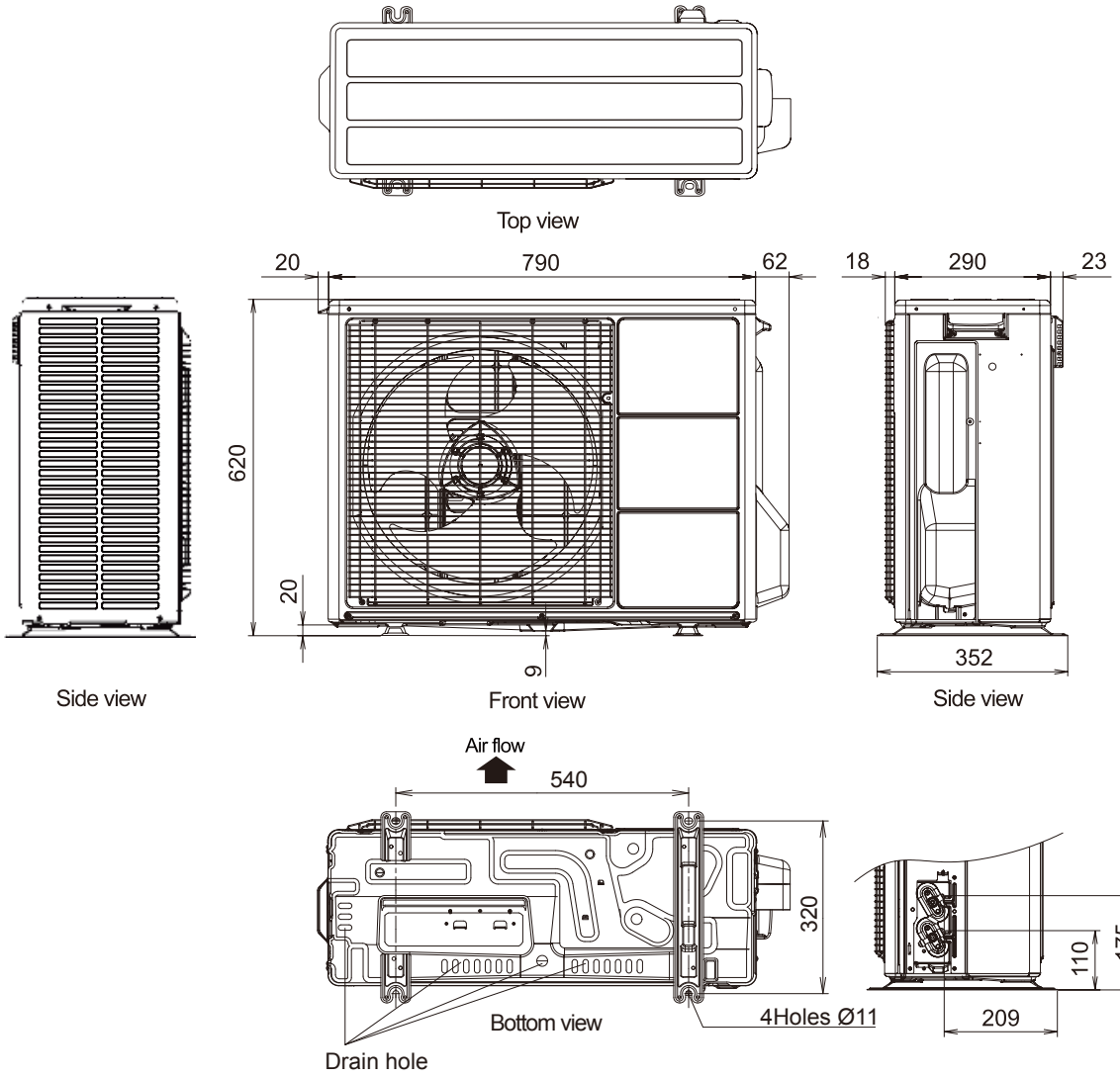

OUTDOOR UNIT
WO∗A060-100LD

■ MODELS : WO∗A100L

(Unit : mm)

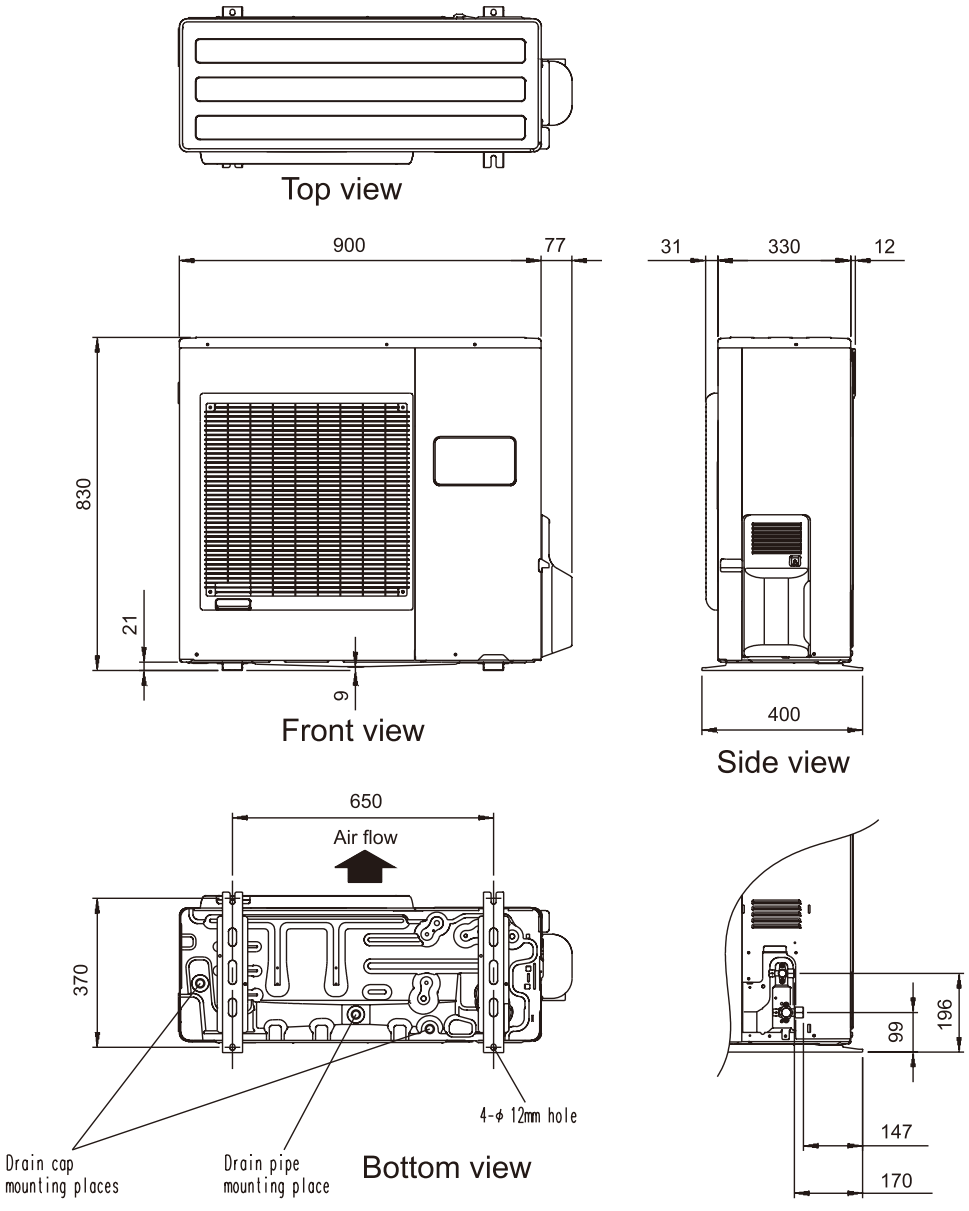

OUTDOOR UNIT
WO∗A060-100LD

3-2. INSTALLATION PLACE

■ MODELS : WO∗A060L, WO∗A080L

(unit: mm)

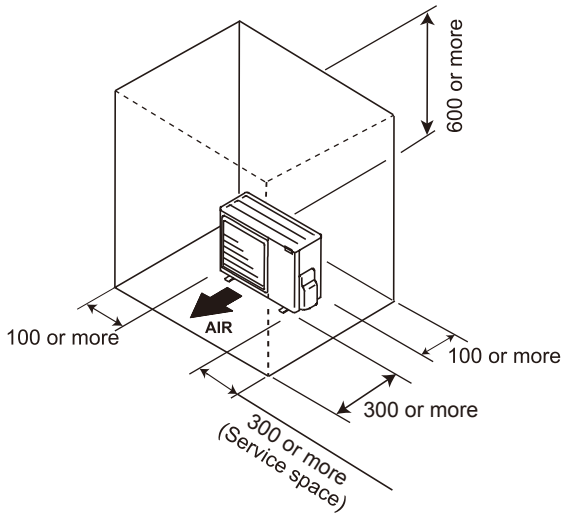

- If the space is larger that is stated, the condition will be the same as that are no obstacles.
- Height above the floor level should be 50 mm or over.

■ MODELS : WO∗A100L

When there are obstacles at the back or front sides.

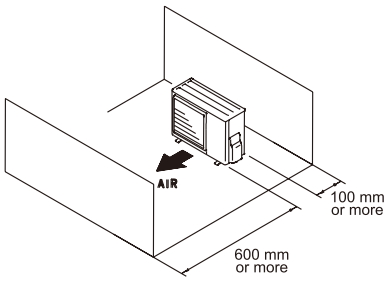

When there are obstacles at the back, side(s), and top.

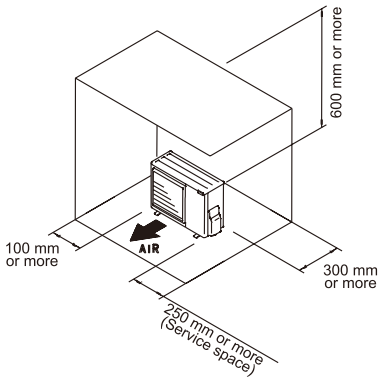

When there are obstacles at the back, side with the installation of more than one unit.

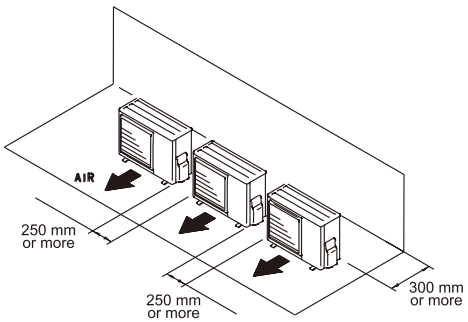

OUTDOOR UNIT
WO∗A060-100LD

4. PIPING DIAGRAM

■ MODELS : WO∗A060L, WO∗A080L

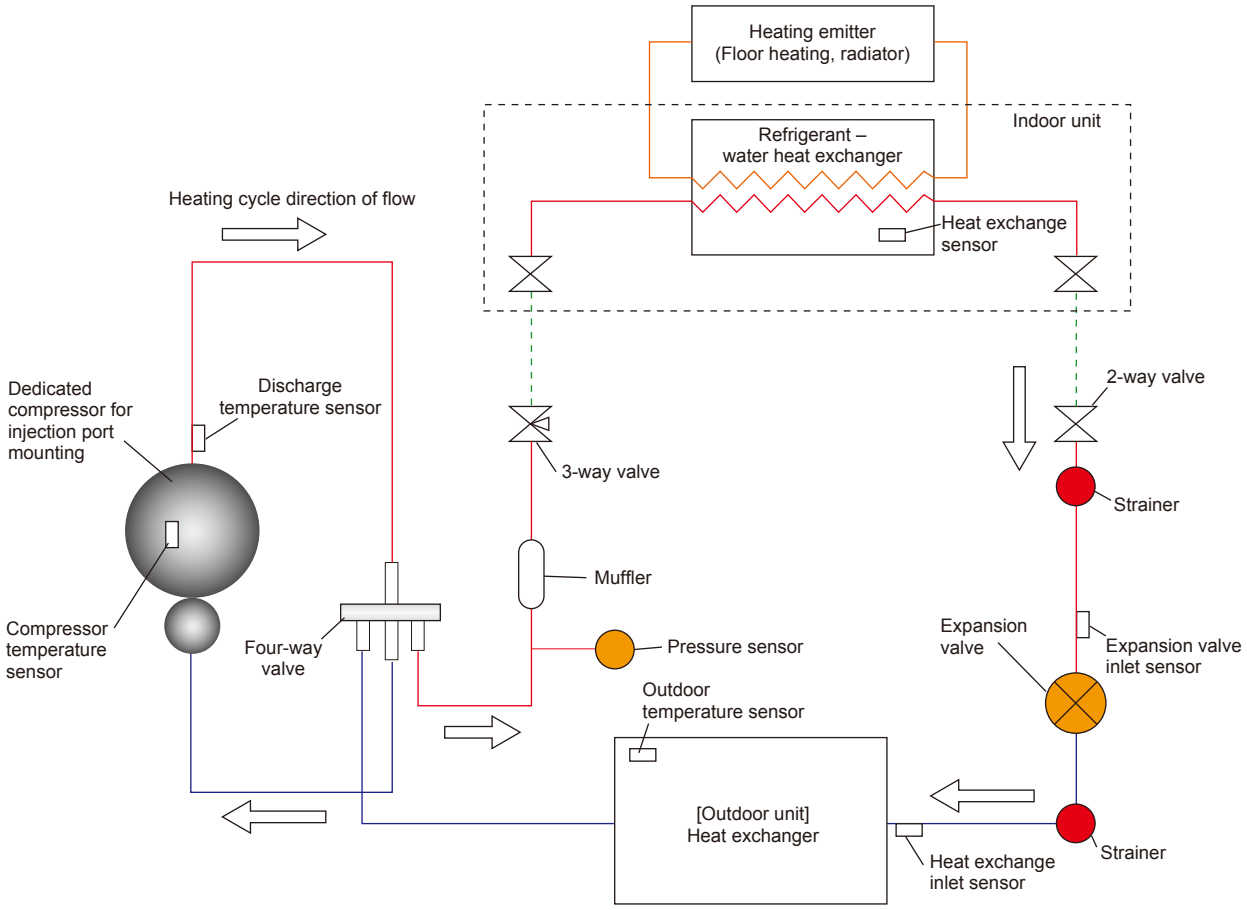

■ MODELS : WO∗A100L

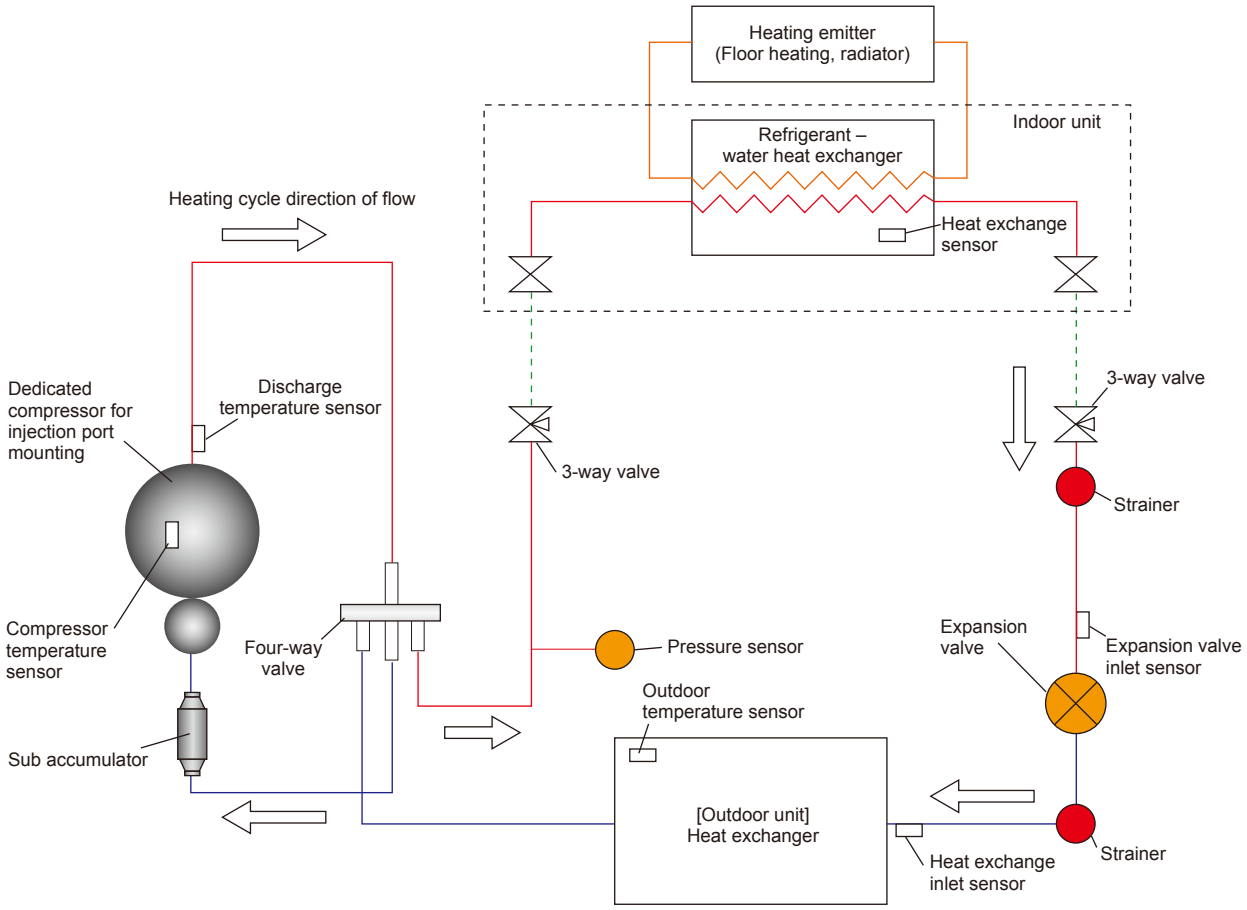

OUTDOOR UNIT
WO∗A060-100LD

5. WIRING DIAGRAM

5-1. WIRING DIAGRAM

■ MODELS : WO∗A060L

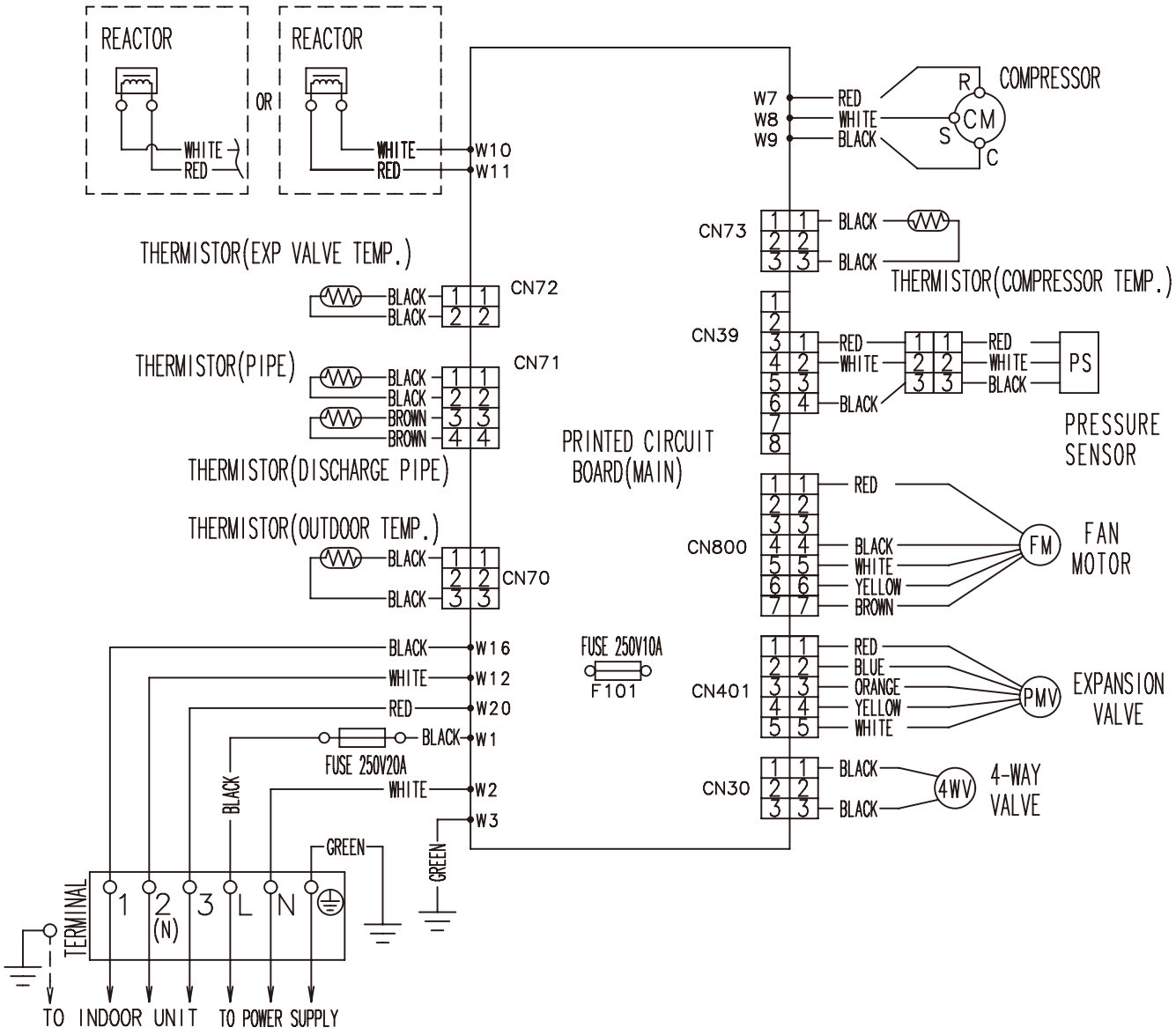

OUTDOOR UNIT
WO∗A060-100LD

■MODELS : WO∗A080L

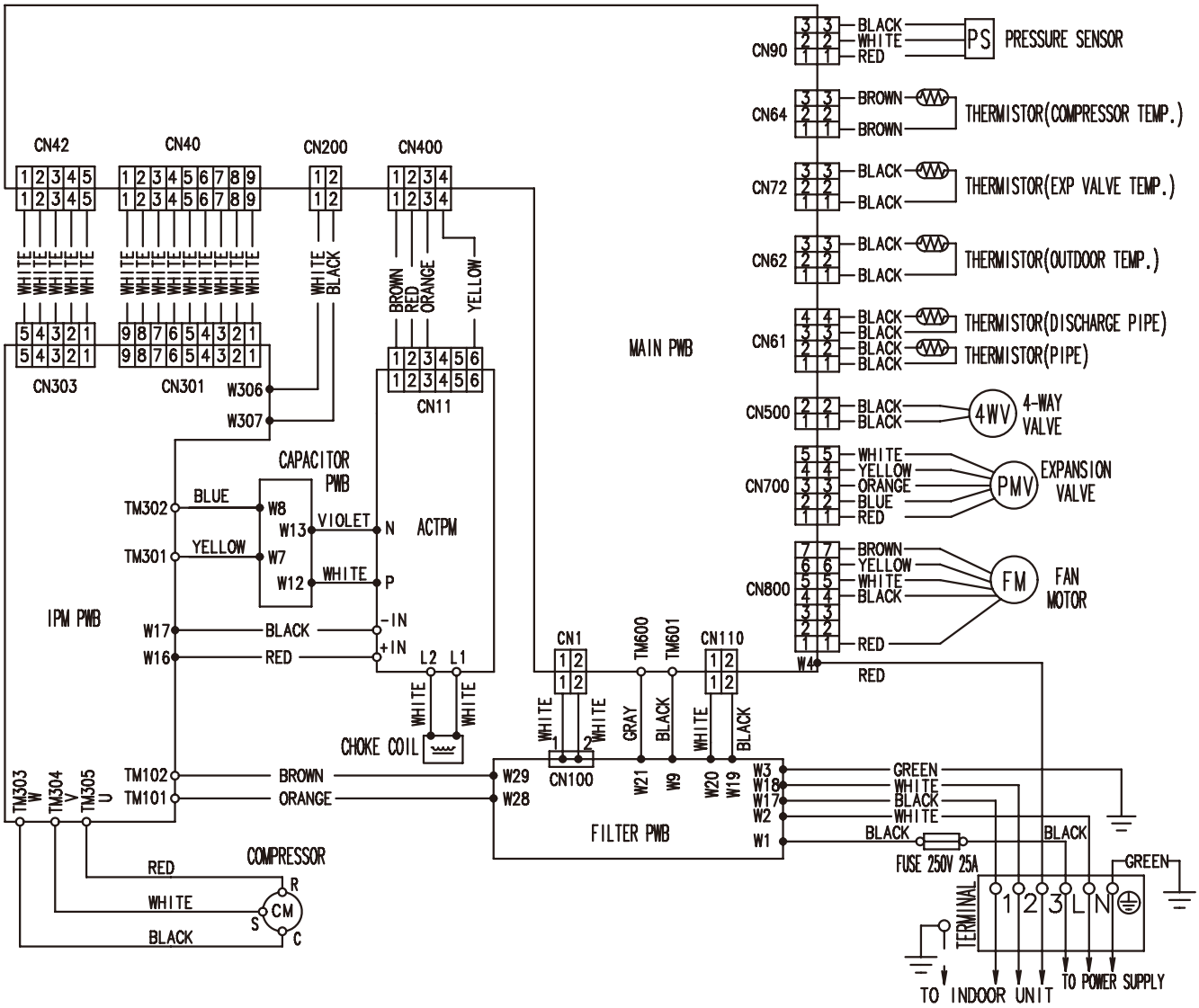

OUTDOOR UNIT
WO∗A060-100LD

■ MODELS : WO∗A100L

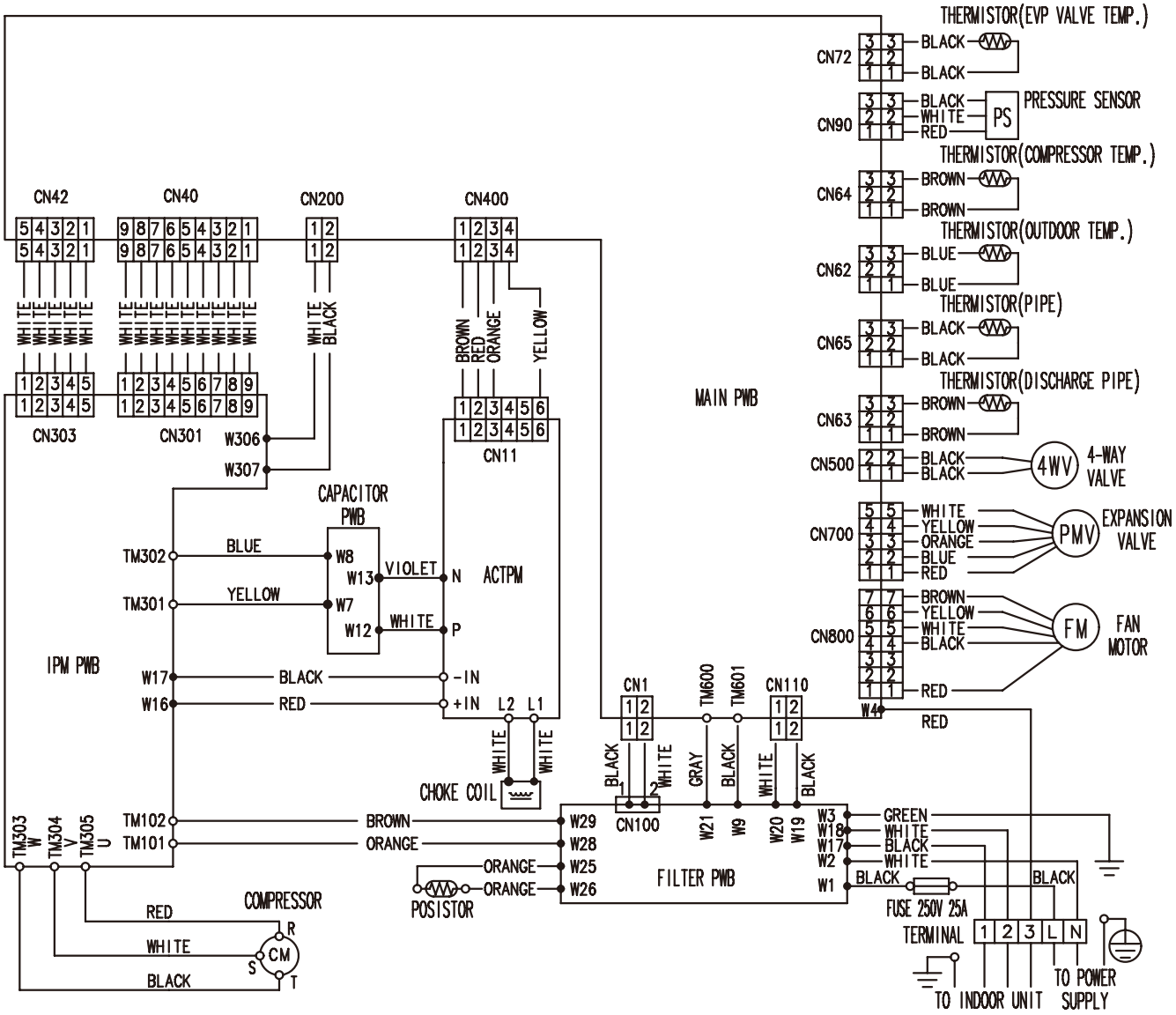

OUTDOOR UNIT
WO∗A060-100LD

6. CAPACITY TABLES

6-1. HEATING CAPACITY

■ MODEL: WO∗A060L (4.5kW type)

FT	30°C			35°C			40°C			45°C			50°C			55°C		
OT	HC	IP	COP	HC	IP	COP	HC	IP	COP	HC	IP	COP	HC	IP	COP	HC	IP	COP
-20°C	2.87	1.25	2.30	2.87	1.37	2.09	2.73	1.46	1.87	—	—	—	—	—	—	—	—	—
-19°C	3.03	1.26	2.40	3.03	1.39	2.18	2.88	1.48	1.95	—	—	—	—	—	—	—	—	—
-18°C	3.19	1.28	2.49	3.19	1.41	2.26	3.04	1.50	2.03	—	—	—	—	—	—	—	—	—
-17°C	3.35	1.29	2.60	3.35	1.43	2.34	3.19	1.52	2.10	—	—	—	—	—	—	—	—	—
-16°C	3.51	1.31	2.68	3.51	1.44	2.44	3.35	1.54	2.18	—	—	—	—	—	—	—	—	—
-15°C	3.67	1.32	2.77	3.67	1.46	2.52	3.50	1.56	2.25	3.32	1.64	2.02	—	—	—	—	—	—
-14°C	3.72	1.32	2.82	3.73	1.46	2.55	3.58	1.57	2.29	3.42	1.67	2.05	—	—	—	—	—	—
-13°C	3.78	1.32	2.86	3.78	1.46	2.59	3.65	1.58	2.31	3.51	1.70	2.06	—	—	—	—	—	—
-12°C	3.83	1.32	2.90	3.83	1.46	2.62	3.73	1.59	2.35	3.61	1.72	2.10	—	—	—	—	—	—
-11°C	3.89	1.32	2.95	3.89	1.47	2.65	3.80	1.61	2.36	3.71	1.75	2.12	3.51	1.91	1.84	—	—	—
-10°C	3.94	1.32	2.98	3.94	1.47	2.68	3.88	1.63	2.39	3.81	1.78	2.14	3.61	1.94	1.86	—	—	—
-9°C	3.99	1.32	3.02	3.99	1.47	2.71	3.95	1.64	2.41	3.90	1.81	2.15	3.70	1.97	1.89	—	—	—
-8°C	4.05	1.32	3.07	4.05	1.47	2.76	4.03	1.65	2.44	4.00	1.83	2.19	3.80	1.99	1.91	—	—	—
-7°C	4.10	1.32	3.11	4.10	1.47	2.79	4.10	1.65	2.48	4.10	1.86	2.20	3.90	2.02	1.93	3.70	2.20	1.68
-6°C	4.14	1.32	3.14	4.14	1.46	2.84	4.12	1.64	2.51	4.09	1.82	2.25	3.91	1.98	1.97	3.73	2.18	1.71
-5°C	4.19	1.31	3.20	4.19	1.45	2.89	4.14	1.62	2.56	4.08	1.78	2.29	3.92	1.94	2.02	3.77	2.15	1.75
-4°C	4.23	1.31	3.23	4.23	1.44	2.94	4.15	1.59	2.62	4.07	1.73	2.35	3.93	1.91	2.06	3.80	2.13	1.78
-3°C	4.28	1.31	3.27	4.28	1.44	2.97	4.17	1.57	2.66	4.06	1.69	2.40	3.94	1.87	2.11	3.83	2.10	1.82
-2°C	4.32	1.30	3.32	4.32	1.43	3.02	4.18	1.54	2.71	4.04	1.65	2.45	3.96	1.83	2.16	3.87	2.08	1.86
-1°C	4.37	1.30	3.36	4.37	1.42	3.08	4.20	1.52	2.77	4.03	1.61	2.50	3.97	1.79	2.21	3.90	2.05	1.90
0°C	4.41	1.30	3.39	4.41	1.41	3.13	4.22	1.49	2.84	4.02	1.56	2.58	3.98	1.76	2.27	3.93	2.03	1.94
1°C	4.46	1.29	3.46	4.46	1.40	3.19	4.24	1.45	2.93	4.01	1.52	2.64	3.99	1.72	2.32	3.97	2.00	1.99
2°C	4.50	1.29	3.49	4.50	1.39	3.24	4.25	1.42	2.99	4.00	1.48	2.70	4.00	1.68	2.38	4.00	1.98	2.02
3°C	4.50	1.20	3.75	4.50	1.30	3.46	4.31	1.36	3.17	4.13	1.45	2.85	4.13	1.65	2.50	4.13	1.94	2.13
4°C	4.50	1.10	4.09	4.50	1.21	3.72	4.38	1.29	3.40	4.25	1.41	3.01	4.25	1.61	2.64	4.25	1.91	2.23
5°C	4.50	0.94	4.77	4.50	1.06	4.24	4.50	1.20	3.76	4.50	1.37	3.28	4.50	1.58	2.85	4.50	1.88	2.40
6°C	4.50	0.91	4.94	4.50	1.03	4.38	4.50	1.16	3.87	4.50	1.34	3.37	4.50	1.54	2.92	4.50	1.83	2.46
7°C	4.50	0.88	5.11	4.50	1.00	4.52	4.50	1.13	3.98	4.50	1.30	3.46	4.50	1.51	2.99	4.50	1.79	2.51
8°C	4.50	0.85	5.28	4.50	0.97	4.66	4.50	1.10	4.09	4.50	1.27	3.55	4.50	1.48	3.05	4.50	1.76	2.56
9°C	4.50	0.83	5.45	4.50	0.94	4.80	4.50	1.07	4.20	4.50	1.24	3.64	4.50	1.44	3.12	4.50	1.72	2.62
10°C	4.50	0.80	5.61	4.50	0.91	4.94	4.50	1.04	4.32	4.50	1.21	3.73	4.50	1.41	3.19	4.50	1.69	2.67
11°C	4.50	0.78	5.78	4.50	0.89	5.08	4.50	1.02	4.43	4.50	1.18	3.82	4.50	1.38	3.26	4.50	1.65	2.72
12°C	4.50	0.76	5.95	4.50	0.86	5.22	4.50	0.99	4.54	4.50	1.15	3.91	4.50	1.35	3.33	4.50	1.62	2.78
13°C	4.50	0.74	6.12	4.50	0.84	5.36	4.50	0.97	4.65	4.50	1.13	4.00	4.50	1.32	3.40	4.50	1.59	2.83
14°C	4.50	0.72	6.28	4.50	0.82	5.49	4.50	0.94	4.77	4.50	1.10	4.09	4.50	1.30	3.47	4.50	1.56	2.88
15°C	4.50	0.70	6.45	4.50	0.80	5.63	4.50	0.92	4.88	4.50	1.08	4.18	4.50	1.27	3.54	4.50	1.54	2.93
16°C	4.50	0.68	6.62	4.50	0.78	5.77	4.50	0.90	4.99	4.50	1.05	4.27	4.50	1.25	3.60	4.50	1.51	2.99
17°C	4.50	0.66	6.79	4.50	0.76	5.91	4.50	0.88	5.10	4.50	1.03	4.36	4.50	1.23	3.67	4.50	1.48	3.04
18°C	4.50	0.65	6.95	4.50	0.74	6.05	4.50	0.86	5.22	4.50	1.01	4.45	4.50	1.20	3.74	4.50	1.46	3.09
19°C	4.50	0.63	7.12	4.50	0.73	6.19	4.50	0.84	5.33	4.50	0.99	4.54	4.50	1.18	3.81	4.50	1.43	3.15
20°C	4.50	0.62	7.29	4.50	0.71	6.33	4.50	0.83	5.44	4.50	0.97	4.63	4.50	1.16	3.88	4.50	1.41	3.20
21°C	4.50	0.61	7.37	4.50	0.70	6.41	4.50	0.82	5.50	4.50	0.96	4.68	4.50	1.15	3.92	4.50	1.39	3.23
22°C	4.50	0.60	7.45	4.50	0.69	6.49	4.50	0.81	5.56	4.50	0.95	4.73	4.50	1.14	3.95	4.50	1.38	3.25
23°C	4.50	0.60	7.53	4.50	0.69	6.56	4.50	0.80	5.63	4.50	0.94	4.77	4.50	1.13	3.99	4.50	1.37	3.28
24°C	4.50	0.59	7.61	4.50	0.68	6.64	4.50	0.79	5.69	4.50	0.93	4.82	4.50	1.12	4.03	4.50	1.36	3.31
25°C	4.50	0.59	7.69	4.50	0.67	6.72	4.50	0.78	5.75	4.50	0.92	4.87	4.50	1.11	4.06	4.50	1.35	3.33
26°C	4.50	0.58	7.77	4.50	0.66	6.80	4.50	0.77	5.81	4.50	0.91	4.92	4.50	1.10	4.10	4.50	1.34	3.36
27°C	4.50	0.57	7.85	4.50	0.65	6.88	4.50	0.77	5.87	4.50	0.91	4.97	4.50	1.09	4.14	4.50	1.33	3.39
28°C	4.50	0.57	7.94	4.50	0.65	6.95	4.50	0.76	5.94	4.50	0.90	5.01	4.50	1.08	4.17	4.50	1.32	3.41
29°C	4.50	0.56	8.02	4.50	0.64	7.03	4.50	0.75	6.00	4.50	0.89	5.06	4.50	1.07	4.21	4.50	1.31	3.44
30°C	4.50	0.56	8.10	4.50	0.63	7.11	4.50	0.74	6.06	4.50	0.88	5.11	4.50	1.06	4.25	4.50	1.30	3.47
31°C	4.50	0.55	8.18	4.50	0.63	7.19	4.50	0.74	6.12	4.50	0.87	5.16	4.50	1.05	4.28	4.50	1.29	3.49
32°C	4.50	0.54	8.26	4.50	0.62	7.27	4.50	0.73	6.18	4.50	0.86	5.21	4.50	1.04	4.32	4.50	1.28	3.52
33°C	4.50	0.54	8.34	4.50	0.61	7.34	4.50	0.72	6.25	4.50	0.86	5.25	4.50	1.03	4.36	4.50	1.27	3.55
34°C	4.50	0.53	8.42	4.50	0.61	7.42	4.50	0.71	6.31	4.50	0.85	5.30	4.50	1.03	4.39	4.50	1.26	3.57
35°C	4.50	0.53	8.50	4.50	0.60	7.50	4.50	0.71	6.37	4.50	0.84	5.35	4.50	1.02	4.43	4.50	1.25	3.60

FT : Flow temperature
OT : Outdoor temperature
HC : Heating capacity (kW)
IP : Input power (kW)
COP : Coefficient of performance

The values of heating capacity/power input/COP are based on measurement of EN14511 standard;
FT < 45°C : The flow rate obtained during the test at the standard rating conditions of OT 7°C and Water temp. flow/return 35°C / 30°C, 780 l/h
FT ≧ 45°C : The flow rate obtained during the test at the standard rating conditions of OT 7°C and Water temp. flow/return 45°C / 40°C, 888 l/h
FT = 55°C : The flow rate obtained during the test at the standard rating conditions of OT 7°C and Water temp. flow/return 55°C / 47°C, 492 l/h

Usage environment, such as operation of the heating equipment, room temperature, and controller adjustments, may cause disparities between practically determined and measured values.

OUTDOOR UNIT
WO∗A060-100LD

■ MODEL: WO∗A060L (6.0kW type)

FT	30°C			35°C			40°C			45°C			50°C			55°C		
OT	HC	IP	COP	HC	IP	COP	HC	IP	COP	HC	IP	COP	HC	IP	COP	HC	IP	COP
-20°C	3.72	1.68	2.21	3.67	1.78	2.06	3.60	1.92	1.87	—	—	—	—	—	—	—	—	—
-19°C	3.79	1.66	2.28	3.74	1.76	2.13	3.67	1.90	1.93	—	—	—	—	—	—	—	—	—
-18°C	3.87	1.64	2.36	3.82	1.73	2.21	3.75	1.88	1.99	—	—	—	—	—	—	—	—	—
-17°C	3.95	1.62	2.44	3.89	1.71	2.27	3.82	1.85	2.06	—	—	—	—	—	—	—	—	—
-16°C	4.02	1.60	2.51	3.97	1.69	2.35	3.90	1.83	2.13	—	—	—	—	—	—	—	—	—
-15°C	4.10	1.58	2.60	4.04	1.67	2.42	3.97	1.80	2.20	3.91	1.96	1.99	—	—	—	—	—	—
-14°C	4.17	1.59	2.62	4.11	1.68	2.45	4.04	1.81	2.23	3.98	1.97	2.02	—	—	—	—	—	—
-13°C	4.25	1.60	2.66	4.18	1.69	2.47	4.11	1.82	2.26	4.05	1.98	2.05	—	—	—	—	—	—
-12°C	4.32	1.60	2.70	4.25	1.69	2.51	4.18	1.83	2.28	4.11	1.99	2.07	—	—	—	—	—	—
-11°C	4.39	1.61	2.73	4.32	1.70	2.54	4.25	1.84	2.31	4.18	2.00	2.09	3.88	2.12	1.83	—	—	—
-10°C	4.46	1.62	2.75	4.39	1.71	2.57	4.32	1.85	2.34	4.25	2.01	2.11	3.95	2.13	1.85	—	—	—
-9°C	4.54	1.63	2.79	4.46	1.72	2.59	4.39	1.85	2.37	4.32	2.02	2.14	4.02	2.14	1.88	—	—	—
-8°C	4.61	1.64	2.81	4.53	1.73	2.62	4.46	1.86	2.40	4.38	2.03	2.16	4.08	2.15	1.90	—	—	—
-7°C	4.68	1.65	2.84	4.60	1.74	2.64	4.53	1.87	2.42	4.45	2.04	2.18	4.15	2.16	1.92	3.85	2.33	1.65
-6°C	4.74	1.63	2.91	4.64	1.72	2.70	4.55	1.84	2.47	4.46	2.00	2.23	4.19	2.13	1.97	3.92	2.32	1.69
-5°C	4.79	1.62	2.96	4.68	1.69	2.77	4.57	1.81	2.52	4.46	1.96	2.28	4.23	2.11	2.00	3.99	2.31	1.73
-4°C	4.85	1.60	3.03	4.72	1.67	2.83	4.60	1.78	2.58	4.47	1.92	2.33	4.27	2.08	2.05	4.07	2.31	1.76
-3°C	4.90	1.59	3.08	4.76	1.65	2.88	4.62	1.75	2.64	4.47	1.88	2.38	4.31	2.06	2.09	4.14	2.30	1.80
-2°C	4.96	1.57	3.16	4.79	1.62	2.96	4.64	1.72	2.70	4.48	1.85	2.42	4.34	2.03	2.14	4.21	2.29	1.84
-1°C	5.01	1.56	3.21	4.83	1.60	3.02	4.66	1.69	2.76	4.48	1.81	2.48	4.38	2.01	2.18	4.28	2.28	1.88
0°C	5.07	1.54	3.29	4.87	1.58	3.08	4.68	1.66	2.82	4.49	1.77	2.54	4.42	1.98	2.23	4.36	2.28	1.91
1°C	5.12	1.53	3.35	4.91	1.55	3.17	4.70	1.63	2.88	4.49	1.73	2.60	4.46	1.96	2.28	4.43	2.27	1.95
2°C	5.18	1.51	3.43	4.95	1.53	3.24	4.73	1.60	2.95	4.50	1.69	2.70	4.50	1.93	2.33	4.50	2.26	1.99
3°C	5.50	1.49	3.69	5.21	1.51	3.45	4.93	1.57	3.14	4.65	1.65	2.82	4.58	1.86	2.46	4.50	2.15	2.09
4°C	5.82	1.47	3.96	5.48	1.49	3.68	5.14	1.55	3.32	4.80	1.62	2.96	4.65	1.80	2.58	4.50	2.05	2.20
5°C	6.45	1.47	4.40	6.00	1.49	4.04	5.55	1.53	3.63	5.10	1.57	3.24	4.80	1.70	2.83	4.50	1.88	2.40
6°C	6.45	1.42	4.54	6.00	1.44	4.16	5.55	1.49	3.73	5.10	1.54	3.32	4.80	1.66	2.89	4.50	1.83	2.46
7°C	6.45	1.38	4.67	6.00	1.41	4.27	5.55	1.45	3.83	5.10	1.50	3.40	4.80	1.62	2.96	4.50	1.79	2.51
8°C	6.45	1.34	4.80	6.00	1.37	4.38	5.55	1.41	3.93	5.10	1.47	3.48	4.80	1.58	3.03	4.50	1.76	2.56
9°C	6.45	1.31	4.94	6.00	1.33	4.50	5.55	1.38	4.03	5.10	1.43	3.56	4.80	1.55	3.09	4.50	1.72	2.62
10°C	6.45	1.27	5.07	6.00	1.30	4.61	5.55	1.34	4.13	5.10	1.40	3.65	4.80	1.52	3.16	4.50	1.69	2.67
11°C	6.45	1.24	5.21	6.00	1.27	4.73	5.55	1.32	4.22	5.10	1.37	3.73	4.80	1.49	3.23	4.50	1.65	2.72
12°C	6.45	1.21	5.34	6.00	1.24	4.84	5.55	1.28	4.32	5.10	1.34	3.81	4.80	1.46	3.29	4.50	1.62	2.78
13°C	6.45	1.18	5.48	6.00	1.21	4.96	5.55	1.26	4.42	5.10	1.31	3.89	4.80	1.43	3.36	4.50	1.59	2.83
14°C	6.45	1.15	5.61	6.00	1.18	5.07	5.55	1.23	4.52	5.10	1.28	3.98	4.80	1.40	3.43	4.50	1.56	2.88
15°C	6.45	1.12	5.75	6.00	1.16	5.19	5.55	1.20	4.62	5.10	1.26	4.06	4.80	1.37	3.50	4.50	1.54	2.93
16°C	6.45	1.10	5.88	6.00	1.13	5.30	5.55	1.18	4.72	5.10	1.23	4.14	4.80	1.35	3.56	4.50	1.51	2.99
17°C	6.45	1.07	6.02	6.00	1.11	5.42	5.55	1.15	4.81	5.10	1.21	4.22	4.80	1.32	3.63	4.50	1.48	3.04
18°C	6.45	1.05	6.15	6.00	1.08	5.53	5.55	1.13	4.91	5.10	1.18	4.31	4.80	1.30	3.70	4.50	1.46	3.09
19°C	6.45	1.03	6.29	6.00	1.06	5.65	5.55	1.11	5.01	5.10	1.16	4.39	4.80	1.28	3.76	4.50	1.43	3.15
20°C	6.45	1.00	6.42	6.00	1.04	5.76	5.55	1.09	5.11	5.10	1.14	4.47	4.80	1.25	3.83	4.50	1.41	3.20
21°C	6.45	1.00	6.48	6.00	1.03	5.82	5.55	1.08	5.16	5.10	1.13	4.51	4.80	1.24	3.86	4.50	1.39	3.23
22°C	6.45	0.98	6.55	6.00	1.02	5.87	5.55	1.07	5.20	5.10	1.12	4.55	4.80	1.23	3.90	4.50	1.38	3.25
23°C	6.45	0.98	6.61	6.00	1.01	5.93	5.55	1.06	5.25	5.10	1.11	4.59	4.80	1.22	3.93	4.50	1.37	3.28
24°C	6.45	0.97	6.67	6.00	1.00	5.98	5.55	1.05	5.30	5.10	1.10	4.63	4.80	1.21	3.96	4.50	1.36	3.31
25°C	6.45	0.96	6.73	6.00	0.99	6.04	5.55	1.04	5.35	5.10	1.09	4.67	4.80	1.20	4.00	4.50	1.35	3.33
26°C	6.45	0.95	6.80	6.00	0.98	6.10	5.55	1.03	5.39	5.10	1.08	4.71	4.80	1.19	4.03	4.50	1.34	3.36
27°C	6.45	0.94	6.86	6.00	0.98	6.15	5.55	1.02	5.44	5.10	1.07	4.75	4.80	1.18	4.06	4.50	1.33	3.39
28°C	6.45	0.93	6.92	6.00	0.97	6.21	5.55	1.01	5.49	5.10	1.06	4.79	4.80	1.17	4.10	4.50	1.32	3.41
29°C	6.45	0.92	6.98	6.00	0.96	6.26	5.55	1.00	5.54	5.10	1.06	4.83	4.80	1.16	4.13	4.50	1.31	3.44
30°C	6.45	0.91	7.05	6.00	0.95	6.32	5.55	0.99	5.58	5.10	1.05	4.87	4.80	1.15	4.16	4.50	1.30	3.47
31°C	6.45	0.91	7.11	6.00	0.94	6.38	5.55	0.99	5.63	5.10	1.04	4.91	4.80	1.14	4.20	4.50	1.29	3.49
32°C	6.45	0.90	7.17	6.00	0.93	6.43	5.55	0.98	5.68	5.10	1.03	4.95	4.80	1.13	4.23	4.50	1.28	3.52
33°C	6.45	0.89	7.23	6.00	0.92	6.49	5.55	0.97	5.73	5.10	1.02	4.99	4.80	1.13	4.26	4.50	1.27	3.55
34°C	6.45	0.88	7.30	6.00	0.92	6.54	5.55	0.96	5.77	5.10	1.01	5.03	4.80	1.12	4.30	4.50	1.26	3.57
35°C	6.45	0.88	7.36	6.00	0.91	6.60	5.55	0.95	5.82	5.10	1.01	5.07	4.80	1.11	4.33	4.50	1.25	3.60

FT : Flow temperature
OT : Outdoor temperature
HC : Heating capacity (kW)
IP : Input power (kW)
COP : Coefficient of performance

The values of heating capacity/power input/COP are based on measurement of EN14511 standard;
FT < 45°C : The flow rate obtained during the test at the standard rating conditions of OT 7°C and Water temp. flow/return 35°C / 30°C, 1040 l/h
FT ≧ 45°C : The flow rate obtained during the test at the standard rating conditions of OT 7°C and Water temp. flow/return 45°C / 40°C, 783 l/h
FT = 55°C : The flow rate obtained during the test at the standard rating conditions of OT 7°C and Water temp. flow/return 55°C / 47°C, 492 l/h

Usage environment, such as operation of the heating equipment, room temperature, and controller adjustments, may cause disparities between practically determined and measured values.

OUTDOOR UNIT
WO∗A060-100LD

■ MODEL: WO∗A080L

FT	30°C			35°C			40°C			45°C			50°C			55°C		
OT	HC	IP	COP	HC	IP	COP	HC	IP	COP	HC	IP	COP	HC	IP	COP	HC	IP	COP
-20°C	4.49	2.03	2.21	4.26	2.13	2.00	4.03	2.21	1.82	—	—	—	—	—	—	—	—	—
-19°C	4.91	2.21	2.22	4.66	2.33	2.00	4.40	2.42	1.82	—	—	—	—	—	—	—	—	—
-18°C	5.32	2.40	2.22	5.05	2.52	2.00	4.78	2.62	1.82	—	—	—	—	—	—	—	—	—
-17°C	5.74	2.58	2.22	5.45	2.72	2.00	5.16	2.82	1.83	—	—	—	—	—	—	—	—	—
-16°C	5.77	2.54	2.27	5.48	2.67	2.05	5.18	2.77	1.87	—	—	—	—	—	—	—	—	—
-15°C	5.80	2.49	2.33	5.50	2.62	2.10	5.20	2.72	1.91	4.90	2.82	1.74	—	—	—	—	—	—
-14°C	5.83	2.45	2.38	5.53	2.57	2.15	5.22	2.67	1.96	4.92	2.77	1.78	—	—	—	—	—	—
-13°C	5.86	2.40	2.44	5.55	2.52	2.20	5.25	2.63	2.00	4.94	2.73	1.81	—	—	—	—	—	—
-12°C	5.89	2.36	2.50	5.58	2.47	2.26	5.27	2.58	2.04	4.96	2.69	1.84	—	—	—	—	—	—
-11°C	5.92	2.31	2.56	5.60	2.42	2.31	5.29	2.53	2.09	4.98	2.64	1.89	4.96	2.97	1.67	—	—	—
-10°C	5.94	2.27	2.62	5.63	2.38	2.37	5.31	2.48	2.14	4.99	2.60	1.92	4.98	2.93	1.70	—	—	—
-9°C	5.97	2.22	2.69	5.65	2.33	2.42	5.34	2.44	2.19	5.01	2.56	1.96	4.99	2.89	1.73	—	—	—
-8°C	6.00	2.18	2.75	5.68	2.28	2.49	5.36	2.39	2.24	5.03	2.51	2.00	5.01	2.84	1.76	—	—	—
-7°C	6.03	2.13	2.83	5.70	2.23	2.56	5.38	2.34	2.30	5.05	2.47	2.04	5.03	2.80	1.80	5.00	3.21	1.56
-6°C	6.02	2.09	2.88	5.69	2.18	2.61	5.37	2.28	2.36	5.04	2.41	2.09	5.05	2.74	1.84	5.00	3.13	1.60
-5°C	6.02	2.05	2.94	5.69	2.13	2.67	5.37	2.23	2.41	5.04	2.35	2.14	5.07	2.69	1.88	5.00	3.06	1.63
-4°C	6.01	2.01	2.99	5.68	2.08	2.73	5.36	2.17	2.47	5.03	2.29	2.20	5.09	2.63	1.94	5.00	2.99	1.67
-3°C	6.01	1.97	3.05	5.68	2.03	2.80	5.36	2.12	2.53	5.03	2.23	2.26	5.11	2.57	1.99	5.00	2.92	1.71
-2°C	6.00	1.92	3.13	5.67	1.98	2.86	5.35	2.06	2.60	5.02	2.16	2.32	5.12	2.51	2.04	5.00	2.85	1.75
-1°C	6.00	1.88	3.19	5.67	1.93	2.94	5.34	2.01	2.66	5.02	2.10	2.39	5.14	2.46	2.09	5.00	2.78	1.80
0°C	5.99	1.84	3.26	5.66	1.88	3.01	5.34	1.95	2.74	5.01	2.04	2.46	5.16	2.40	2.15	5.00	2.71	1.85
1°C	5.99	1.80	3.33	5.66	1.83	3.09	5.33	1.90	2.81	5.01	1.98	2.53	5.18	2.34	2.21	5.00	2.64	1.89
2°C	5.98	1.76	3.40	5.65	1.78	3.17	5.33	1.84	2.89	5.00	1.92	2.60	5.20	2.29	2.28	5.00	2.56	1.95
3°C	6.52	1.79	3.64	6.11	1.81	3.38	5.71	1.86	3.07	5.30	1.92	2.76	5.30	2.19	2.42	5.00	2.41	2.07
4°C	7.07	1.82	3.88	6.58	1.84	3.58	6.09	1.88	3.24	5.60	1.92	2.92	5.40	2.10	2.57	5.00	2.26	2.21
5°C	7.61	1.85	4.18	7.04	1.86	3.85	6.47	1.89	3.50	6.20	1.95	3.18	5.60	1.96	2.86	5.00	1.98	2.53
6°C	8.15	1.88	4.33	7.50	1.89	3.96	6.85	1.91	3.59	6.20	1.91	3.25	5.60	1.92	2.91	5.00	1.96	2.55
7°C	8.15	1.82	4.48	7.50	1.84	4.08	6.85	1.86	3.68	6.20	1.87	3.31	5.60	1.90	2.95	5.00	1.94	2.58
8°C	8.15	1.76	4.63	7.50	1.79	4.20	6.85	1.82	3.77	6.20	1.84	3.37	5.60	1.87	2.99	5.00	1.92	2.61
9°C	8.15	1.71	4.78	7.50	1.74	4.31	6.85	1.77	3.86	6.20	1.80	3.44	5.60	1.84	3.04	5.00	1.90	2.63
10°C	8.15	1.66	4.92	7.50	1.69	4.43	6.85	1.73	3.95	6.20	1.77	3.50	5.60	1.82	3.08	5.00	1.88	2.66
11°C	8.15	1.61	5.07	7.50	1.65	4.55	6.85	1.70	4.04	6.20	1.74	3.57	5.60	1.79	3.12	5.00	1.86	2.69
12°C	8.15	1.56	5.22	7.50	1.61	4.66	6.85	1.66	4.13	6.20	1.71	3.63	5.60	1.77	3.17	5.00	1.85	2.71
13°C	8.15	1.52	5.37	7.50	1.57	4.78	6.85	1.62	4.22	6.20	1.68	3.70	5.60	1.74	3.21	5.00	1.82	2.74
14°C	8.15	1.48	5.51	7.50	1.53	4.90	6.85	1.59	4.31	6.20	1.65	3.76	5.60	1.72	3.25	5.00	1.81	2.77
15°C	8.15	1.44	5.66	7.50	1.49	5.02	6.85	1.56	4.40	6.20	1.62	3.83	5.60	1.70	3.29	5.00	1.79	2.80
16°C	8.15	1.40	5.81	7.50	1.46	5.13	6.85	1.53	4.49	6.20	1.59	3.89	5.60	1.68	3.34	5.00	1.77	2.82
17°C	8.15	1.37	5.96	7.50	1.43	5.25	6.85	1.50	4.58	6.20	1.57	3.96	5.60	1.66	3.38	5.00	1.75	2.85
18°C	8.15	1.34	6.10	7.50	1.40	5.37	6.85	1.47	4.67	6.20	1.54	4.02	5.60	1.64	3.42	5.00	1.74	2.88
19°C	8.15	1.30	6.25	7.50	1.37	5.48	6.85	1.44	4.76	6.20	1.52	4.09	5.60	1.61	3.47	5.00	1.72	2.90
20°C	8.15	1.27	6.40	7.50	1.34	5.60	6.85	1.41	4.85	6.20	1.49	4.15	5.60	1.60	3.51	5.00	1.71	2.93
21°C	8.15	1.26	6.46	7.50	1.33	5.65	6.85	1.40	4.90	6.20	1.48	4.19	5.60	1.58	3.54	5.00	1.69	2.96
22°C	8.15	1.25	6.52	7.50	1.31	5.71	6.85	1.39	4.94	6.20	1.47	4.23	5.60	1.56	3.58	5.00	1.67	2.99
23°C	8.15	1.24	6.59	7.50	1.30	5.76	6.85	1.37	4.99	6.20	1.45	4.27	5.60	1.55	3.61	5.00	1.66	3.01
24°C	8.15	1.23	6.65	7.50	1.29	5.81	6.85	1.36	5.03	6.20	1.44	4.31	5.60	1.53	3.65	5.00	1.64	3.04
25°C	8.15	1.21	6.71	7.50	1.28	5.87	6.85	1.35	5.08	6.20	1.43	4.35	5.60	1.52	3.68	5.00	1.63	3.07
26°C	8.15	1.20	6.77	7.50	1.27	5.92	6.85	1.34	5.13	6.20	1.41	4.39	5.60	1.51	3.71	5.00	1.61	3.10
27°C	8.15	1.19	6.83	7.50	1.26	5.97	6.85	1.32	5.17	6.20	1.40	4.43	5.60	1.49	3.75	5.00	1.60	3.13
28°C	8.15	1.18	6.90	7.50	1.24	6.03	6.85	1.31	5.22	6.20	1.39	4.47	5.60	1.48	3.78	5.00	1.59	3.15
29°C	8.15	1.17	6.96	7.50	1.23	6.08	6.85	1.30	5.26	6.20	1.37	4.51	5.60	1.47	3.82	5.00	1.57	3.18
30°C	8.15	1.16	7.02	7.50	1.22	6.13	6.85	1.29	5.31	6.20	1.36	4.55	5.60	1.45	3.85	5.00	1.56	3.21
31°C	8.15	1.15	7.08	7.50	1.21	6.19	6.85	1.28	5.36	6.20	1.35	4.59	5.60	1.44	3.88	5.00	1.54	3.24
32°C	8.15	1.14	7.14	7.50	1.20	6.24	6.85	1.27	5.40	6.20	1.34	4.63	5.60	1.43	3.92	5.00	1.53	3.27
33°C	8.15	1.13	7.21	7.50	1.19	6.29	6.85	1.26	5.45	6.20	1.33	4.67	5.60	1.42	3.95	5.00	1.52	3.29
34°C	8.15	1.12	7.27	7.50	1.18	6.35	6.85	1.25	5.49	6.20	1.32	4.71	5.60	1.40	3.99	5.00	1.51	3.32
35°C	8.15	1.11	7.33	7.50	1.17	6.40	6.85	1.24	5.54	6.20	1.31	4.75	5.60	1.39	4.02	5.00	1.49	3.35

FT : Flow temperature
OT : Outdoor temperature
HC : Heating capacity (kW)
IP : Input power (kW)
COP : Coefficient of performance

The values of heating capacity/power input/COP are based on measurement of EN14511 standard;
FT < 45°C : The flow rate obtained during the test at the standard rating conditions of OT 7°C and Water temp. flow/return 35°C / 30°C, 1300 l/h
FT ≧ 45°C : The flow rate obtained during the test at the standard rating conditions of OT 7°C and Water temp. flow/return 45°C / 40°C, 1079 l/h
FT = 55°C : The flow rate obtained during the test at the standard rating conditions of OT 7°C and Water temp. flow/return 55°C / 47°C, 546 l/h

Usage environment, such as operation of the heating equipment, room temperature, and controller adjustments, may cause disparities between practically determined and measured values.

OUTDOOR UNIT
WO∗A060-100LD

■ MODEL: WO∗A100L

FT	30°C			35°C			40°C			45°C			50°C			55°C		
OT	HC	IP	COP	HC	IP	COP	HC	IP	COP	HC	IP	COP	HC	IP	COP	HC	IP	COP
-20°C	5.97	2.57	2.32	5.89	2.86	2.06	5.60	3.05	1.84	—	—	—	—	—	—	—	—	—
-19°C	6.41	2.72	2.36	6.31	3.01	2.10	5.97	3.20	1.87	—	—	—	—	—	—	—	—	—
-18°C	6.84	2.86	2.39	6.73	3.17	2.12	6.34	3.36	1.89	—	—	—	—	—	—	—	—	—
-17°C	7.28	3.01	2.42	7.15	3.33	2.15	6.71	3.51	1.91	—	—	—	—	—	—	—	—	—
-16°C	7.29	2.97	2.45	7.18	3.29	2.18	6.78	3.50	1.94	—	—	—	—	—	—	—	—	—
-15°C	7.30	2.93	2.49	7.20	3.26	2.21	6.85	3.48	1.97	6.50	3.65	1.78	—	—	—	—	—	—
-14°C	7.31	2.90	2.52	7.23	3.22	2.25	6.92	3.46	2.00	6.61	3.66	1.81	—	—	—	—	—	—
-13°C	7.33	2.86	2.56	7.25	3.19	2.27	6.99	3.44	2.03	6.72	3.66	1.84	—	—	—	—	—	—
-12°C	7.34	2.82	2.60	7.28	3.15	2.31	7.06	3.42	2.06	6.84	3.67	1.86	—	—	—	—	—	—
-11°C	7.35	2.79	2.63	7.30	3.11	2.35	7.13	3.40	2.10	6.95	3.68	1.89	6.77	3.93	1.72	—	—	—
-10°C	7.36	2.75	2.68	7.33	3.08	2.38	7.19	3.39	2.12	7.06	3.68	1.92	6.93	3.94	1.76	—	—	—
-9°C	7.38	2.71	2.72	7.35	3.04	2.42	7.26	3.37	2.15	7.17	3.69	1.94	7.08	3.94	1.80	—	—	—
-8°C	7.39	2.68	2.76	7.38	3.01	2.45	7.33	3.35	2.19	7.29	3.69	1.98	7.25	3.95	1.84	—	—	—
-7°C	7.40	2.64	2.78	7.40	2.97	2.49	7.40	3.33	2.22	7.40	3.70	2.00	7.20	3.95	1.82	7.00	4.15	1.69
-6°C	7.48	2.62	2.85	7.43	2.91	2.55	7.38	3.24	2.28	7.33	3.58	2.05	7.16	3.85	1.86	6.98	4.10	1.70
-5°C	7.57	2.60	2.91	7.47	2.86	2.61	7.37	3.15	2.34	7.27	3.46	2.10	7.11	3.74	1.90	6.96	4.05	1.72
-4°C	7.65	2.59	2.95	7.50	2.80	2.68	7.35	3.06	2.40	7.20	3.34	2.16	7.07	3.64	1.94	6.93	4.00	1.73
-3°C	7.73	2.57	3.01	7.53	2.75	2.74	7.33	2.97	2.47	7.13	3.22	2.21	7.02	3.54	1.98	6.91	3.95	1.75
-2°C	7.82	2.55	3.07	7.57	2.69	2.81	7.32	2.87	2.55	7.07	3.10	2.28	6.98	3.43	2.03	6.89	3.90	1.77
-1°C	7.90	2.53	3.12	7.60	2.64	2.88	7.30	2.78	2.63	7.00	2.98	2.35	6.93	3.33	2.08	6.87	3.85	1.78
0°C	7.98	2.52	3.17	7.63	2.58	2.96	7.28	2.69	2.71	6.93	2.86	2.42	6.89	3.23	2.13	6.84	3.80	1.80
1°C	8.07	2.50	3.23	7.67	2.53	3.03	7.27	2.60	2.80	6.87	2.74	2.51	6.84	3.12	2.19	6.82	3.75	1.82
2°C	8.15	2.48	3.29	7.70	2.47	3.12	7.25	2.51	2.89	6.80	2.62	2.60	6.80	3.02	2.25	6.80	3.70	1.84
3°C	8.83	2.50	3.53	8.28	2.49	3.33	7.72	2.52	3.06	7.17	2.61	2.75	7.01	2.95	2.38	6.85	3.50	1.96
4°C	9.51	2.52	3.77	8.85	2.52	3.51	8.20	2.54	3.23	7.54	2.61	2.89	7.22	2.87	2.52	6.90	3.31	2.08
5°C	10.19	2.54	4.10	9.43	2.54	3.81	8.67	2.55	3.48	7.90	2.60	3.12	7.43	2.80	2.75	6.95	3.11	2.35
6°C	10.87	2.56	4.24	10.00	2.56	3.91	9.14	2.56	3.57	8.27	2.59	3.19	7.64	2.72	2.81	7.00	2.92	2.40
7°C	10.87	2.49	4.37	10.00	2.49	4.02	9.14	2.50	3.66	8.27	2.53	3.27	7.64	2.66	2.87	7.00	2.86	2.45
8°C	10.87	2.42	4.50	10.00	2.42	4.13	9.14	2.44	3.75	8.27	2.47	3.35	7.64	2.61	2.93	7.00	2.80	2.50
9°C	10.87	2.34	4.64	10.00	2.36	4.23	9.14	2.38	3.84	8.27	2.42	3.42	7.64	2.56	2.99	7.00	2.75	2.55
10°C	10.87	2.28	4.77	10.00	2.30	4.34	9.14	2.33	3.93	8.27	2.36	3.50	7.64	2.50	3.05	7.00	2.69	2.60
11°C	10.87	2.22	4.90	10.00	2.25	4.44	9.14	2.27	4.02	8.27	2.32	3.57	7.64	2.45	3.12	7.00	2.65	2.64
12°C	10.87	2.16	5.04	10.00	2.20	4.55	9.14	2.22	4.11	8.27	2.27	3.65	7.64	2.40	3.18	7.00	2.60	2.69
13°C	10.87	2.10	5.17	10.00	2.15	4.66	9.14	2.18	4.20	8.27	2.22	3.72	7.64	2.36	3.24	7.00	2.55	2.74
14°C	10.87	2.05	5.30	10.00	2.10	4.76	9.14	2.13	4.29	8.27	2.18	3.80	7.64	2.32	3.30	7.00	2.51	2.79
15°C	10.87	2.00	5.43	10.00	2.05	4.87	9.14	2.09	4.38	8.27	2.14	3.87	7.64	2.27	3.36	7.00	2.46	2.84
16°C	10.87	1.95	5.57	10.00	2.01	4.98	9.14	2.04	4.47	8.27	2.09	3.95	7.64	2.23	3.42	7.00	2.42	2.89
17°C	10.87	1.91	5.70	10.00	1.97	5.08	9.14	2.00	4.56	8.27	2.06	4.02	7.64	2.19	3.49	7.00	2.39	2.93
18°C	10.87	1.86	5.83	10.00	1.93	5.19	9.14	1.97	4.65	8.27	2.02	4.10	7.64	2.15	3.55	7.00	2.35	2.98
19°C	10.87	1.82	5.97	10.00	1.89	5.29	9.14	1.93	4.74	8.27	1.98	4.17	7.64	2.12	3.61	7.00	2.31	3.03
20°C	10.87	1.82	6.10	10.00	1.85	5.40	9.14	1.89	4.83	8.27	1.95	4.25	7.64	2.08	3.67	7.00	2.27	3.08
21°C	10.87	1.77	6.15	10.00	1.84	5.43	9.14	1.88	4.86	8.27	1.93	4.28	7.64	2.06	3.70	7.00	2.26	3.10
22°C	10.87	1.76	6.19	10.00	1.83	5.46	9.14	1.87	4.89	8.27	1.92	4.31	7.64	2.05	3.72	7.00	2.24	3.13
23°C	10.87	1.74	6.24	10.00	1.82	5.49	9.14	1.86	4.92	8.27	1.91	4.34	7.64	2.04	3.75	7.00	2.22	3.15
24°C	10.87	1.73	6.29	10.00	1.81	5.53	9.14	1.85	4.95	8.27	1.89	4.37	7.64	2.02	3.78	7.00	2.20	3.18
25°C	10.87	1.72	6.33	10.00	1.80	5.56	9.14	1.84	4.98	8.27	1.88	4.40	7.64	2.01	3.81	7.00	2.19	3.20
26°C	10.87	1.70	6.38	10.00	1.79	5.59	9.14	1.82	5.01	8.27	1.87	4.43	7.64	1.99	3.83	7.00	2.17	3.23
27°C	10.87	1.69	6.43	10.00	1.78	5.62	9.14	1.81	5.04	8.27	1.85	4.46	7.64	1.98	3.86	7.00	2.15	3.25
28°C	10.87	1.68	6.47	10.00	1.77	5.65	9.14	1.80	5.08	8.27	1.85	4.48	7.64	1.96	3.89	7.00	2.13	3.28
29°C	10.87	1.67	6.52	10.00	1.76	5.68	9.14	1.79	5.11	8.27	1.83	4.51	7.64	1.95	3.92	7.00	2.12	3.30
30°C	10.87	1.65	6.57	10.00	1.75	5.71	9.14	1.78	5.14	8.27	1.82	4.54	7.64	1.94	3.94	7.00	2.10	3.33
31°C	10.87	1.64	6.61	10.00	1.74	5.74	9.14	1.77	5.17	8.27	1.81	4.57	7.64	1.92	3.97	7.00	2.09	3.35
32°C	10.87	1.63	6.66	10.00	1.73	5.78	9.14	1.76	5.20	8.27	1.80	4.60	7.64	1.91	4.00	7.00	2.07	3.38
33°C	10.87	1.62	6.71	10.00	1.72	5.81	9.14	1.75	5.23	8.27	1.79	4.63	7.64	1.90	4.03	7.00	2.06	3.40
34°C	10.87	1.61	6.75	10.00	1.71	5.84	9.14	1.74	5.26	8.27	1.77	4.66	7.64	1.89	4.05	7.00	2.04	3.43
35°C	10.87	1.69	6.80	10.00	1.70	5.87	9.14	1.73	5.29	8.27	1.76	4.69	7.64	1.87	4.08	7.00	2.03	3.45

FT : Flow temperature
OT : Outdoor temperature
HC : Heating capacity (kW)
IP : Input power (kW)
COP : Coefficient of performance

The values of heating capacity/power input/COP are based on measurement of EN14511 standard;
FT < 45°C : The flow rate obtained during the test at the standard rating conditions of OT 7°C and Water temp. flow/return 35°C / 30°C, 1730 l/h
FT ≧ 45°C : The flow rate obtained during the test at the standard rating conditions of OT 7°C and Water temp. flow/return 45°C / 40°C, 1439 l/h
FT = 55°C : The flow rate obtained during the test at the standard rating conditions of OT 7°C and Water temp. flow/return 55°C / 47°C, 764 l/h

Usage environment, such as operation of the heating equipment, room temperature, and controller adjustments, may cause disparities between practically determined and measured values.

OUTDOOR UNIT
WO∗A060-100LD

6-2. COOLING CAPACITY *

■ MODEL: WO∗A060L (4.5kW type)

FT	6 °C			7 °C			10 °C			13 °C			15 °C			18 °C			22 °C		
OT	CC	IP	COP	CC	IP	COP	CC	IP	COP	CC	IP	COP	CC	IP	COP	CC	IP	COP	CC	IP	COP
20 °C	2.80	0.93	3.02	2.90	0.91	3.19	3.20	0.85	3.75	3.50	0.79	4.44	3.70	0.74	4.97	4.00	0.68	5.86	4.40	0.61	7.22
21 °C	2.80	0.94	2.98	2.90	0.93	3.12	3.20	0.87	3.68	3.50	0.81	4.32	3.70	0.77	4.81	4.00	0.71	5.63	4.40	0.64	6.88
22 °C	2.80	0.96	2.92	2.90	0.94	3.09	3.20	0.89	3.60	3.50	0.83	4.22	3.70	0.79	4.68	4.00	0.74	5.41	4.40	0.67	6.57
23 °C	2.80	0.98	2.86	2.90	0.96	3.02	3.20	0.91	3.52	3.50	0.86	4.07	3.70	0.81	4.57	4.00	0.77	5.19	4.40	0.71	6.20
24 °C	2.80	0.99	2.83	2.90	0.98	2.96	3.20	0.93	3.44	3.50	0.88	3.98	3.70	0.84	4.40	4.00	0.79	5.06	4.40	0.74	5.95
25 °C	2.80	1.01	2.77	2.90	1.00	2.90	3.20	0.95	3.37	3.50	0.90	3.89	3.70	0.86	4.30	4.00	0.82	4.88	4.40	0.77	5.71
26 °C	2.80	1.03	2.72	2.90	1.02	2.84	3.20	0.97	3.30	3.50	0.93	3.76	3.70	0.89	4.16	4.00	0.86	4.65	4.40	0.81	5.43
27 °C	2.80	1.05	2.66	2.90	1.04	2.79	3.20	0.99	3.23	3.50	0.96	3.65	3.70	0.92	4.02	4.00	0.89	4.48	4.40	0.85	5.15
28 °C	2.80	1.08	2.59	2.90	1.06	2.74	3.20	1.02	3.14	3.50	0.98	3.57	3.70	0.95	3.89	4.00	0.92	4.35	4.40	0.88	5.00
29 °C	2.80	1.10	2.55	2.90	1.09	2.66	3.20	1.05	3.05	3.50	1.01	3.47	3.70	0.97	3.81	4.00	0.94	4.26	4.40	0.90	4.89
30 °C	2.80	1.13	2.48	2.90	1.12	2.59	3.20	1.07	2.99	3.50	1.04	3.37	3.70	1.00	3.70	4.00	0.97	4.12	4.40	0.92	4.78
31 °C	2.80	1.16	2.41	2.90	1.14	2.54	3.20	1.10	2.91	3.50	1.06	3.30	3.70	1.03	3.59	4.00	0.99	4.04	4.40	0.95	4.63
32 °C	2.80	1.19	2.35	2.90	1.17	2.48	3.20	1.13	2.83	3.50	1.09	3.21	3.70	1.06	3.49	4.00	1.02	3.92	4.40	0.97	4.54
33 °C	2.80	1.21	2.31	2.90	1.20	2.42	3.20	1.16	2.76	3.50	1.12	3.13	3.70	1.09	3.39	4.00	1.05	3.81	4.40	1.00	4.40
34 °C	2.80	1.25	2.24	2.90	1.23	2.36	3.20	1.19	2.69	3.50	1.15	3.04	3.70	1.12	3.30	4.00	1.07	3.74	4.40	1.02	4.31
35 °C	2.80	1.28	2.19	2.90	1.26	2.30	3.20	1.23	2.60	3.50	1.18	2.96	3.70	1.16	3.20	4.00	1.11	3.61	4.40	1.06	4.17
36 °C	2.80	1.30	2.15	2.90	1.29	2.25	3.20	1.25	2.56	3.50	1.20	2.92	3.70	1.18	3.14	4.00	1.13	3.54	4.40	1.07	4.11
37 °C	2.80	1.33	2.11	2.90	1.31	2.21	3.20	1.27	2.52	3.50	1.22	2.87	3.70	1.20	3.08	4.00	1.15	3.48	4.40	1.09	4.05
38 °C	2.73	1.33	2.06	2.83	1.31	2.15	3.14	1.28	2.45	3.45	1.23	2.80	3.65	1.22	3.00	3.95	1.17	3.37	4.37	1.12	3.91
39 °C	2.65	1.32	2.00	2.76	1.32	2.09	3.07	1.29	2.39	3.40	1.25	2.72	3.60	1.24	2.91	3.91	1.20	3.26	4.33	1.15	3.76
40 °C	2.58	1.32	1.95	2.69	1.32	2.04	3.01	1.30	2.32	3.35	1.26	2.65	3.55	1.25	2.83	3.86	1.22	3.16	4.30	1.19	3.62
41 °C	2.51	1.32	1.90	2.61	1.32	1.98	2.94	1.30	2.25	3.29	1.28	2.58	3.49	1.27	2.74	3.82	1.25	3.05	4.26	1.23	3.47
42 °C	2.43	1.32	1.84	2.54	1.32	1.92	2.88	1.31	2.19	3.24	1.29	2.50	3.44	1.30	2.66	3.77	1.28	2.94	4.23	1.27	3.33
43 °C	2.36	1.32	1.79	2.47	1.33	1.86	2.81	1.33	2.12	3.19	1.31	2.43	3.39	1.32	2.57	3.73	1.32	2.83	4.19	1.32	3.18

* : OPTIONAL PARTS “Cooling kit" is necessary for cooling operation.

FT : Flow temperature
OT : Outdoor temperature
CC : Cooling capacity (kW)
IP : Input power (kW)
COP : Coefficient of performance

The values of cooling capacity/power input/COP are based on measurement of EN14511 standard;
FT < 10°C : The flow rate obtained during the test at the standard rating conditions of OT 35°C and Water temp. flow/return 7°C / 12°C, 727 l/h
FT ≧ 10°C : The flow rate obtained during the test at the standard rating conditions of OT 35°C and Water temp. flow/return 18°C / 23°C, 996 l/h

Usage environment, such as operation of the heating equipment, room temperature, and controller adjustments, may cause disparities between practically determined and measured values.

OUTDOOR UNIT
WO∗A060-100LD

■ MODEL: WO∗A060L (6.0kW type)

FT	6 °C			7 °C			10 °C			13 °C			15 °C			18 °C			22 °C		
OT	CC	IP	COP	CC	IP	COP	CC	IP	COP	CC	IP	COP	CC	IP	COP	CC	IP	COP	CC	IP	COP
20 °C	3.60	1.10	3.27	3.70	1.10	3.37	4.10	1.04	3.94	4.50	0.98	4.59	4.80	0.93	5.14	5.20	0.89	5.86	5.70	0.84	6.77
21 °C	3.60	1.13	3.19	3.70	1.12	3.30	4.10	1.07	3.83	4.50	1.01	4.46	4.80	0.97	4.95	5.20	0.92	5.65	5.70	0.88	6.48
22 °C	3.60	1.15	3.13	3.70	1.14	3.25	4.10	1.09	3.76	4.50	1.04	4.33	4.80	1.00	4.80	5.20	0.96	5.42	5.70	0.91	6.26
23 °C	3.60	1.17	3.08	3.70	1.16	3.19	4.10	1.12	3.66	4.50	1.07	4.21	4.80	1.03	4.66	5.20	0.99	5.25	5.70	0.95	6.00
24 °C	3.60	1.20	3.00	3.70	1.19	3.11	4.10	1.14	3.60	4.50	1.10	4.09	4.80	1.07	4.49	5.20	1.03	5.05	5.70	0.99	5.76
25 °C	3.60	1.22	2.95	3.70	1.21	3.06	4.10	1.17	3.50	4.50	1.13	3.98	4.80	1.10	4.36	5.20	1.07	4.86	5.70	1.03	5.53
26 °C	3.60	1.25	2.88	3.70	1.24	2.98	4.10	1.20	3.42	4.50	1.16	3.88	4.80	1.14	4.21	5.20	1.11	4.68	5.70	1.07	5.33
27 °C	3.60	1.28	2.81	3.70	1.27	2.92	4.10	1.24	3.31	4.50	1.20	3.76	4.80	1.18	4.06	5.20	1.16	4.50	5.70	1.12	5.11
28 °C	3.60	1.32	2.73	3.70	1.30	2.85	4.10	1.27	3.23	4.50	1.24	3.63	4.80	1.23	3.90	5.20	1.20	4.33	5.70	1.16	4.91
29 °C	3.60	1.35	2.67	3.70	1.34	2.76	4.10	1.31	3.13	4.50	1.28	3.52	4.80	1.27	3.78	5.20	1.25	4.16	5.70	1.20	4.75
30 °C	3.60	1.39	2.59	3.70	1.37	2.70	4.10	1.35	3.04	4.50	1.32	3.41	4.80	1.31	3.66	5.20	1.29	4.03	5.70	1.24	4.60
31 °C	3.60	1.42	2.54	3.70	1.41	2.62	4.10	1.39	2.95	4.50	1.37	3.28	4.80	1.36	3.53	5.20	1.34	3.88	5.70	1.28	4.45
32 °C	3.60	1.46	2.47	3.70	1.45	2.55	4.10	1.43	2.87	4.50	1.41	3.19	4.80	1.41	3.40	5.20	1.39	3.74	5.70	1.32	4.32
33 °C	3.60	1.50	2.40	3.70	1.49	2.48	4.10	1.48	2.77	4.50	1.46	3.08	4.80	1.45	3.31	5.20	1.44	3.61	5.70	1.37	4.16
34 °C	3.60	1.54	2.34	3.70	1.53	2.42	4.10	1.52	2.70	4.50	1.51	2.98	4.80	1.50	3.20	5.20	1.50	3.47	5.70	1.42	4.01
35 °C	3.60	1.59	2.26	3.70	1.58	2.34	4.10	1.57	2.61	4.50	1.56	2.88	4.80	1.56	3.07	5.20	1.56	3.34	5.70	1.47	3.87
36 °C	3.60	1.62	2.22	3.70	1.61	2.30	4.10	1.60	2.56	4.50	1.59	2.83	4.80	1.58	3.04	5.20	1.59	3.28	5.70	1.50	3.80
37 °C	3.60	1.65	2.18	3.70	1.64	2.26	4.10	1.63	2.51	4.50	1.62	2.78	4.80	1.59	3.01	5.20	1.61	3.22	5.70	1.53	3.73
38 °C	3.39	1.60	2.12	3.50	1.59	2.19	3.89	1.59	2.45	4.28	1.57	2.72	4.57	1.55	2.94	4.98	1.59	3.14	5.45	1.50	3.64
39 °C	3.19	1.55	2.05	3.29	1.55	2.13	3.67	1.54	2.38	4.06	1.53	2.66	4.33	1.51	2.86	4.73	1.54	3.08	5.20	1.47	3.55
40 °C	2.98	1.50	1.99	3.09	1.50	2.06	3.46	1.49	2.32	3.85	1.48	2.61	4.10	1.47	2.79	4.48	1.48	3.02	4.95	1.43	3.46
41 °C	2.77	1.44	1.92	2.88	1.44	1.99	3.24	1.44	2.25	3.63	1.42	2.55	3.86	1.42	2.72	4.23	1.43	2.95	4.69	1.40	3.36
42 °C	2.57	1.38	1.86	2.68	1.39	1.93	3.03	1.38	2.19	3.41	1.37	2.49	3.63	1.37	2.64	3.98	1.38	2.89	4.44	1.36	3.27
43 °C	2.36	1.32	1.79	2.47	1.33	1.86	2.81	1.33	2.12	3.19	1.31	2.43	3.39	1.32	2.57	3.73	1.32	2.83	4.19	1.32	3.18

* : OPTIONAL PARTS “Cooling kit" is necessary for cooling operation.

FT : Flow temperature
OT : Outdoor temperature
CC : Cooling capacity (kW)
IP : Input power (kW)
COP : Coefficient of performance

The values of cooling capacity/power input/COP are based on measurement of EN14511 standard;
FT < 10°C : The flow rate obtained during the test at the standard rating conditions of OT 35°C and Water temp. flow/return 7°C / 12°C, 727 l/h
FT ≧ 10°C : The flow rate obtained during the test at the standard rating conditions of OT 35°C and Water temp. flow/return 18°C / 23°C, 996 l/h

Usage environment, such as operation of the heating equipment, room temperature, and controller adjustments, may cause disparities between practically determined and measured values.

OUTDOOR UNIT
WO∗A060-100LD

■ MODEL: WO∗A080L

FT	6 °C			7 °C			10 °C			13 °C			15 °C			18 °C			22 °C		
OT	CC	IP	COP	CC	IP	COP	CC	IP	COP	CC	IP	COP	CC	IP	COP	CC	IP	COP	CC	IP	COP
20 °C	4.90	1.44	3.41	5.10	1.42	3.60	5.70	1.36	4.18	6.20	1.31	4.74	6.60	1.26	5.25	7.10	1.21	5.87	7.80	1.15	6.81
21 °C	4.90	1.46	3.36	5.10	1.44	3.54	5.70	1.40	4.07	6.20	1.35	4.59	6.60	1.30	5.08	7.10	1.26	5.63	7.80	1.20	6.50
22 °C	4.90	1.49	3.29	5.10	1.47	3.47	5.70	1.43	3.99	6.20	1.38	4.49	6.60	1.34	4.93	7.10	1.30	5.46	7.80	1.25	6.24
23 °C	4.90	1.52	3.22	5.10	1.50	3.40	5.70	1.46	3.90	6.20	1.42	4.37	6.60	1.39	4.75	7.10	1.35	5.26	7.80	1.31	5.95
24 °C	4.90	1.54	3.18	5.10	1.53	3.33	5.70	1.50	3.80	6.20	1.46	4.25	6.60	1.43	4.62	7.10	1.40	5.07	7.80	1.36	5.74
25 °C	4.90	1.57	3.12	5.10	1.56	3.27	5.70	1.54	3.70	6.20	1.51	4.11	6.60	1.48	4.46	7.10	1.46	4.86	7.80	1.42	5.49
26 °C	4.90	1.60	3.06	5.10	1.59	3.21	5.70	1.57	3.63	6.20	1.55	4.00	6.60	1.53	4.31	7.10	1.51	4.70	7.80	1.48	5.27
27 °C	4.90	1.63	3.00	5.10	1.63	3.13	5.70	1.62	3.52	6.20	1.60	3.87	6.60	1.59	4.16	7.10	1.57	4.51	7.80	1.56	5.01
28 °C	4.90	1.69	2.90	5.10	1.69	3.02	5.70	1.68	3.39	6.20	1.66	3.73	6.60	1.65	4.00	7.10	1.64	4.33	7.80	1.62	4.81
29 °C	4.90	1.75	2.80	5.10	1.74	2.93	5.70	1.74	3.28	6.20	1.73	3.58	6.60	1.71	3.86	7.10	1.70	4.18	7.80	1.68	4.64
30 °C	4.90	1.81	2.71	5.10	1.80	2.83	5.70	1.80	3.17	6.20	1.79	3.46	6.60	1.78	3.71	7.10	1.76	4.03	7.80	1.75	4.46
31 °C	4.90	1.87	2.62	5.10	1.86	2.74	5.70	1.86	3.06	6.20	1.86	3.33	6.60	1.84	3.59	7.10	1.83	3.88	7.80	1.81	4.31
32 °C	4.90	1.94	2.53	5.10	1.93	2.64	5.70	1.93	2.95	6.20	1.93	3.21	6.60	1.91	3.46	7.10	1.90	3.74	7.80	1.88	4.15
33 °C	4.90	2.00	2.45	5.10	1.99	2.56	5.70	2.00	2.85	6.20	2.00	3.10	6.60	1.98	3.33	7.10	1.97	3.60	7.80	1.95	4.00
34 °C	4.90	2.07	2.37	5.10	2.06	2.48	5.70	2.07	2.75	6.20	2.07	3.00	6.60	2.05	3.22	7.10	2.04	3.48	7.80	2.03	3.84
35 °C	4.90	2.15	2.28	5.10	2.14	2.39	5.70	2.15	2.65	6.20	2.15	2.88	6.60	2.13	3.09	7.10	2.13	3.34	7.80	2.11	3.69
36 °C	4.90	2.19	2.24	5.10	2.18	2.34	5.70	2.19	2.60	6.20	2.18	2.84	6.60	2.16	3.05	7.10	2.15	3.30	7.80	2.14	3.64
37 °C	4.90	2.23	2.20	5.10	2.23	2.29	5.70	2.24	2.55	6.20	2.21	2.81	6.60	2.20	3.00	7.10	2.17	3.27	7.80	2.17	3.60
38 °C	4.73	2.21	2.14	4.91	2.20	2.24	5.49	2.20	2.50	5.97	2.15	2.77	6.36	2.15	2.96	6.83	2.11	3.24	7.51	2.10	3.58
39 °C	4.56	2.18	2.09	4.72	2.17	2.18	5.29	2.16	2.45	5.75	2.10	2.73	6.11	2.09	2.93	6.57	2.04	3.21	7.22	2.03	3.56
40 °C	4.38	2.16	2.03	4.54	2.13	2.13	5.08	2.11	2.41	5.53	2.05	2.70	5.87	2.03	2.89	6.30	1.98	3.19	6.93	1.95	3.55
41 °C	4.21	2.13	1.97	4.35	2.10	2.07	4.88	2.07	2.36	5.30	2.00	2.66	5.62	1.97	2.85	6.03	1.91	3.16	6.64	1.88	3.53
42 °C	4.04	2.11	1.92	4.16	2.06	2.02	4.67	2.02	2.31	5.08	1.94	2.62	5.38	1.91	2.82	5.77	1.84	3.13	6.35	1.81	3.51
43 °C	3.86	2.08	1.86	3.97	2.03	1.96	4.47	1.98	2.26	4.86	1.88	2.58	5.13	1.85	2.78	5.50	1.77	3.10	6.05	1.73	3.49

* : OPTIONAL PARTS “Cooling kit" is necessary for cooling operation.

FT : Flow temperature
OT : Outdoor temperature
CC : Cooling capacity (kW)
IP : Input power (kW)
COP : Coefficient of performance

The values of cooling capacity/power input/COP are based on measurement of EN14511 standard;
FT < 10°C : The flow rate obtained during the test at the standard rating conditions of OT 35°C and Water temp. flow/return 7°C / 12°C, 1025 l/h
FT ≧ 10°C : The flow rate obtained during the test at the standard rating conditions of OT 35°C and Water temp. flow/return 18°C / 23°C, 1362 l/h

Usage environment, such as operation of the heating equipment, room temperature, and controller adjustments, may cause disparities between practically determined and measured values.

OUTDOOR UNIT
WO∗A060-100LD

■ MODEL: WO∗A100L

FT	6 °C			7 °C			10 °C			13 °C			15 °C			18 °C			22 °C		
OT	CC	IP	COP	CC	IP	COP	CC	IP	COP	CC	IP	COP	CC	IP	COP	CC	IP	COP	CC	IP	COP
20 °C	5.90	1.68	3.51	6.10	1.66	3.68	6.80	1.60	4.26	7.40	1.52	4.86	7.90	1.48	5.33	8.50	1.44	5.92	9.40	1.38	6.83
21 °C	5.90	1.72	3.43	6.10	1.69	3.61	6.80	1.64	4.15	7.40	1.57	4.71	7.90	1.53	5.16	8.50	1.49	5.70	9.40	1.44	6.53
22 °C	5.90	1.75	3.37	6.10	1.73	3.53	6.80	1.68	4.05	7.40	1.62	4.57	7.90	1.59	4.97	8.50	1.55	5.48	9.40	1.50	6.27
23 °C	5.90	1.78	3.31	6.10	1.76	3.47	6.80	1.72	3.95	7.40	1.67	4.43	7.90	1.64	4.82	8.50	1.61	5.28	9.40	1.56	6.03
24 °C	5.90	1.82	3.24	6.10	1.80	3.39	6.80	1.76	3.86	7.40	1.72	4.30	7.90	1.69	4.67	8.50	1.66	5.12	9.40	1.62	5.80
25 °C	5.90	1.86	3.17	6.10	1.84	3.32	6.80	1.81	3.76	7.40	1.78	4.16	7.90	1.75	4.51	8.50	1.73	4.91	9.40	1.69	5.56
26 °C	5.90	1.89	3.12	6.10	1.88	3.24	6.80	1.85	3.68	7.40	1.83	4.04	7.90	1.81	4.36	8.50	1.79	4.75	9.40	1.76	5.34
27 °C	5.90	1.94	3.04	6.10	1.92	3.17	6.80	1.91	3.56	7.40	1.90	3.90	7.90	1.88	4.20	8.50	1.86	4.56	9.40	1.84	5.12
28 °C	5.90	2.01	2.94	6.10	1.99	3.07	6.80	1.98	3.43	7.40	1.96	3.78	7.90	1.94	4.07	8.50	1.92	4.43	9.40	1.89	4.97
29 °C	5.90	2.07	2.85	6.10	2.05	2.98	6.80	2.04	3.33	7.40	2.02	3.66	7.90	2.00	3.95	8.50	1.98	4.29	9.40	1.95	4.82
30 °C	5.90	2.14	2.76	6.10	2.12	2.88	6.80	2.11	3.22	7.40	2.07	3.57	7.90	2.06	3.83	8.50	2.04	4.17	9.40	2.00	4.70
31 °C	5.90	2.21	2.67	6.10	2.19	2.79	6.80	2.18	3.12	7.40	2.13	3.47	7.90	2.13	3.71	8.50	2.10	4.05	9.40	2.06	4.56
32 °C	5.90	2.28	2.59	6.10	2.26	2.70	6.80	2.25	3.02	7.40	2.20	3.36	7.90	2.19	3.61	8.50	2.16	3.94	9.40	2.12	4.43
33 °C	5.90	2.36	2.50	6.10	2.34	2.61	6.80	2.33	2.92	7.40	2.26	3.27	7.90	2.26	3.50	8.50	2.23	3.81	9.40	2.18	4.31
34 °C	5.90	2.44	2.42	6.10	2.41	2.53	6.80	2.41	2.82	7.40	2.33	3.18	7.90	2.33	3.39	8.50	2.30	3.70	9.40	2.24	4.20
35 °C	5.90	2.53	2.33	6.10	2.50	2.44	6.80	2.50	2.72	7.40	2.41	3.07	7.90	2.41	3.28	8.50	2.38	3.58	9.40	2.32	4.05
36 °C	5.90	2.61	2.26	6.10	2.46	2.36	6.80	2.58	2.64	7.40	2.49	2.97	7.90	2.49	3.17	8.50	2.46	3.46	9.40	2.41	3.90
37 °C	5.90	2.69	2.19	6.10	2.42	2.28	6.80	2.65	2.57	7.40	2.59	2.86	7.90	2.58	3.06	8.50	2.55	3.33	9.40	2.50	3.76
38 °C	5.59	2.63	2.13	5.77	2.37	2.22	6.45	2.59	2.49	7.02	2.54	2.77	7.50	2.53	2.96	8.07	2.50	3.22	8.93	2.46	3.63
39 °C	5.29	2.57	2.06	5.45	2.33	2.16	6.10	2.53	2.41	6.64	2.48	2.68	7.09	2.48	2.86	7.63	2.45	3.11	8.46	2.42	3.50
40 °C	4.99	2.50	2.00	5.12	2.29	2.10	5.75	2.47	2.33	6.27	2.42	2.59	6.69	2.42	2.76	7.20	2.39	3.01	8.00	2.38	3.37
41 °C	4.68	2.43	1.93	4.79	2.24	2.04	5.40	2.40	2.25	5.89	2.36	2.49	6.28	2.36	2.66	6.76	2.33	2.90	7.53	2.33	3.23
42 °C	4.38	2.35	1.87	4.47	2.20	1.98	5.05	2.33	2.17	5.51	2.30	2.40	5.88	2.30	2.56	6.33	2.27	2.79	7.06	2.28	3.10
43 °C	4.08	2.26	1.80	4.14	2.16	1.92	4.69	2.25	2.09	5.14	2.22	2.31	5.47	2.22	2.46	5.89	2.20	2.68	6.60	2.22	2.97

* : OPTIONAL PARTS “Cooling kit" is necessary for cooling operation.

FT : Flow temperature
OT : Outdoor temperature
CC : Cooling capacity (kW)
IP : Input power (kW)
COP : Coefficient of performance

The values of cooling capacity/power input/COP are based on measurement of EN14511 standard;
FT < 10°C : The flow rate obtained during the test at the standard rating conditions of OT 35°C and Water temp. flow/return 7°C / 12°C, 1254 l/h
FT ≧ 10°C : The flow rate obtained during the test at the standard rating conditions of OT 35°C and Water temp. flow/return 18°C / 23°C, 1700 l/h

Usage environment, such as operation of the heating equipment, room temperature, and controller adjustments, may cause disparities between practically determined and measured values.

OUTDOOR UNIT
WO∗A060-100LD

7. OPERATION NOISE

7-1. NOISE LEVEL CURVE

■ MODEL: WO∗A060L (4.5kW type)

● Heating

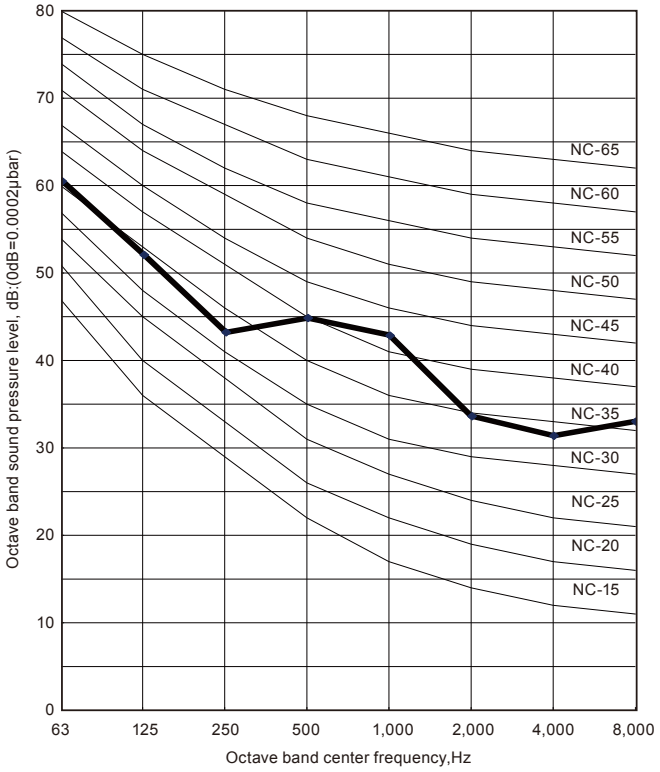

■ MODEL: WO∗A060L (6.0kW type)

● Heating

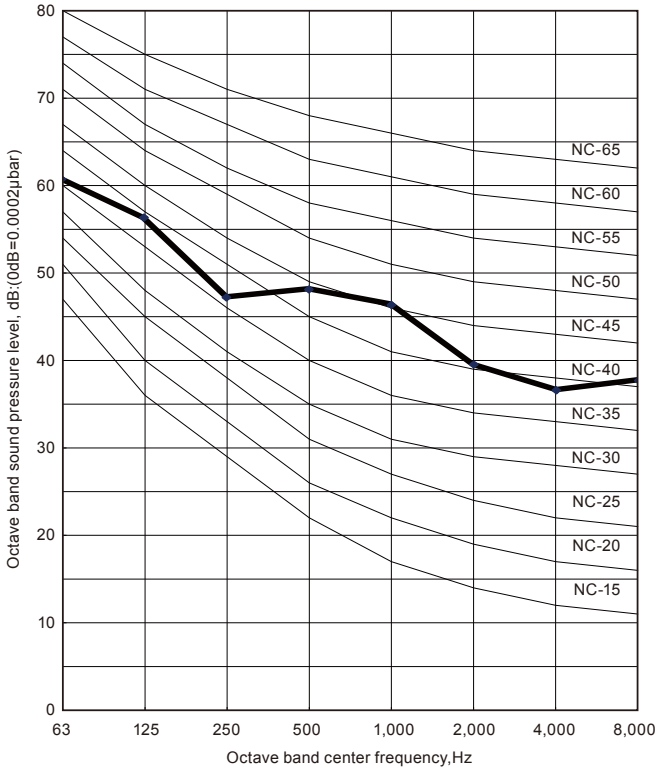

■ MODEL: WO∗A080L

● Heating

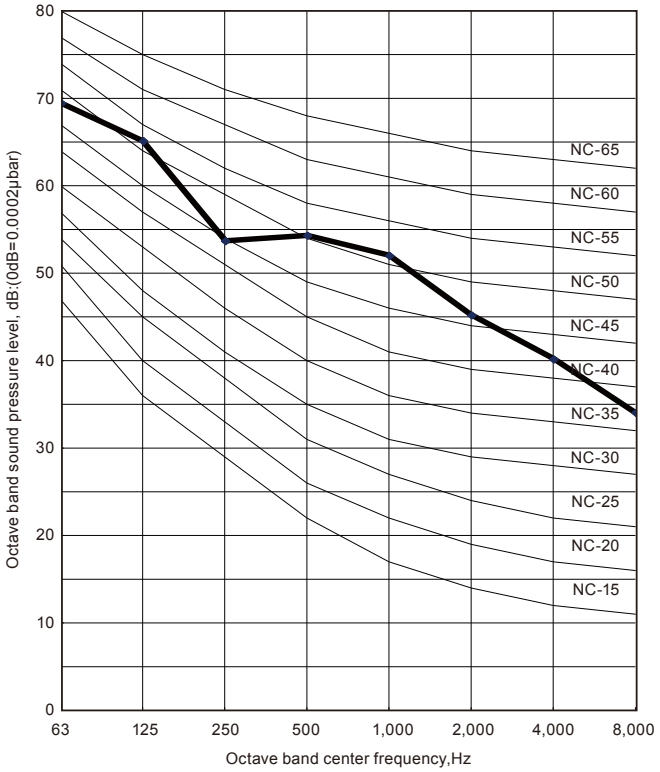

■ MODEL: WO∗A100L

● Heating

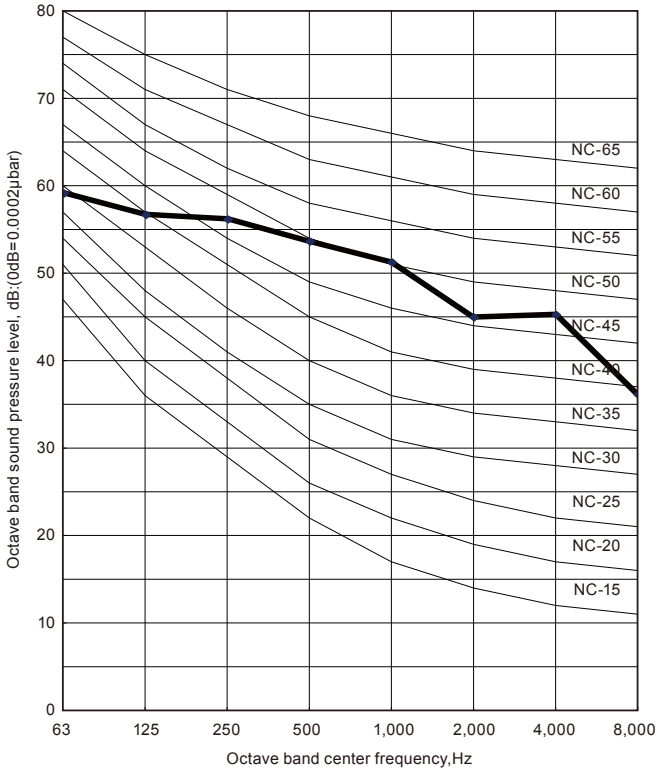

OUTDOOR UNIT
WO*A060-100LD

7-2. SOUND LEVEL CHECK POINT

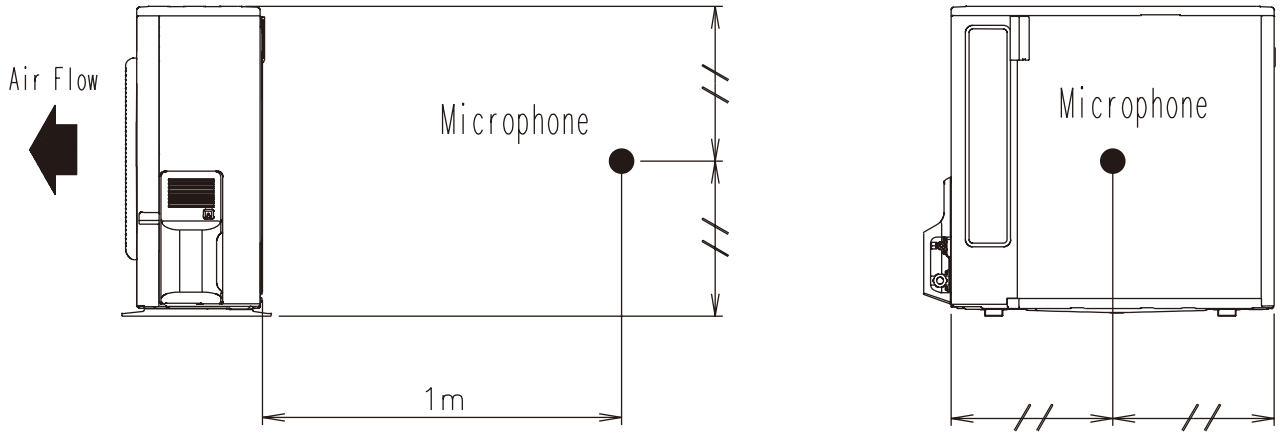

OUTDOOR UNIT
WO∗A060-100LD

8. OPERATION RANGE

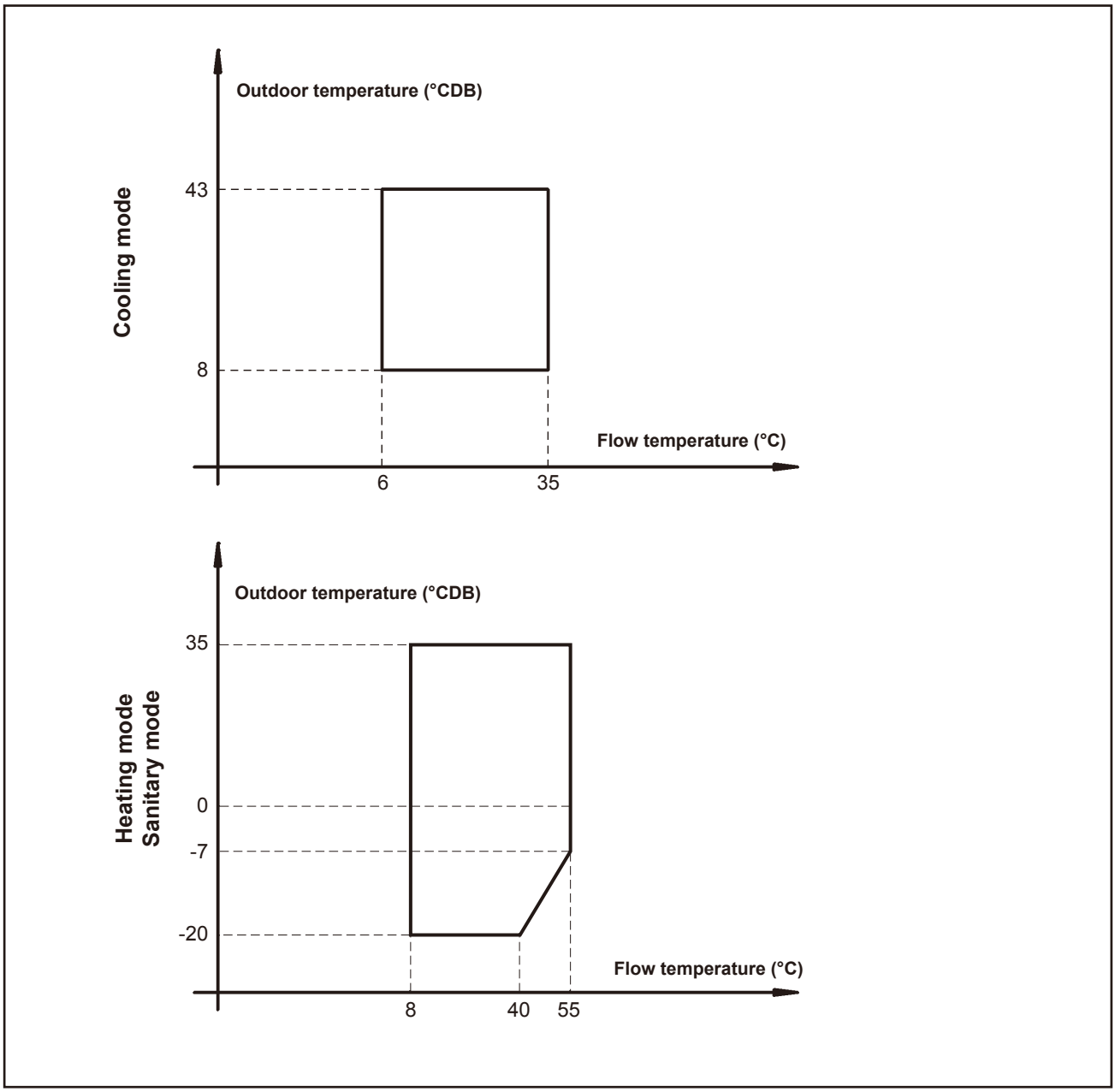

OUTDOOR UNIT
WO∗A060-100LD

9. SAFETY DEVICES

	Protection from	Model		
		WO∗A060LDC	WO∗A080LDC	WO∗A100LDT
Circuit protection	Current fuse (Near the terminal)	250V 20A	250V 25A	250V 25A
	Current fuse (Main PCB)	250V 15A	250V 3.15A	250V 3.15A
		250V 10A		
		250V 3.15A		
Fan motor protection	Thermal protection program	OFF: 100 ± 10 deg ON: 95 ± 10 deg		OFF: 150 ± 15 deg ON: 120 ± 15 deg
Compressor protection	Thermal protection program (Compressor temp.)	OFF: 108 deg, ON: 80 deg		
	Thermal protection program (Discharge temp.)	OFF: 110 deg, ON: After 7 minutes		
High pressure protection	Thermal protection program (Heat exchanger temp.)	OFF: 67 deg, ON: 63 deg		
	Pressure sensor	OFF: 4.2 Mpa, ON: 3.0 MPa		
Low pressure protection (Cooling mode only)	Pressure sensor	OFF: 0.12 Mpa, ON: 0.15 MPa		

OUTDOOR UNIT
WO∗A060-100LD

10. STANDARD ACCESSORIES

Name and shape	Q'ty	Application
Installation manual	1	
Drain pipe	1	For outdoor unit drain piping work (For WO∗A100LDT)
Drain cap	2	
Insulation (seal) 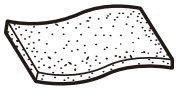	1	For filling in a gap at the entrance of connection cords (For WO∗A100LDT)

Refrigerant R410A INVERTER

WATERSTAGE™

2. HYDRAULIC UNIT

SINGLE PHASE TYPE :

WS*A050DD6
WS*A100DD6

DTW_1SP003E_02--CHAPTER02
2013.03.22

CONTENTS

2. HYDRAULIC UNIT

1. FEATURES ..... IU01 - 01

2. SPECIFICATIONS ..... IU01 - 03
2-1. TECHNICAL SPECIFICATIONS ..... IU01 - 03
2-2. ELECTRICAL SPECIFICATIONS ..... IU01 - 04

3. DIMENSIONS ..... IU01 - 05
3-1. DIMENSIONAL DRAWING ..... IU01 - 05
3-2. INSTALLATION PLACE ..... IU01 - 06

4. PIPING DIAGRAM ..... IU01 - 07

5. WIRING DIAGRAM ..... IU01 - 08
5-1. WIRING DIAGRAM ..... IU01 - 08
5-2. EXTERNAL CONNECTION DIAGRAM ..... IU01 - 09

6. HYDRAULIC PERFORMANCE ..... IU01 - 10
6-1. STATIC PRESSURE DROP UNIT ..... IU01 - 10

7. SAFETY DEVICES ..... IU01 - 11

8. STANDARD ACCESSORIES ..... IU01 - 12

HYDRAULIC UNIT
WS∗A050-100DD6

1. FEATURES

■ MODEL: WS∗A050DD6
WS∗A100DD6

■ INTELLIGENT CONTROL

● 2-zone individual control *

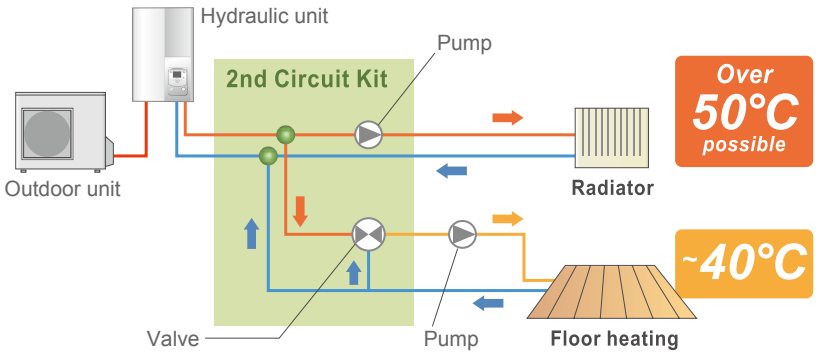

*: Optional parts are required

■ HIGH RELIABILITY

● High durability

- Corrosion protected
- No flow switch and no filter necessary

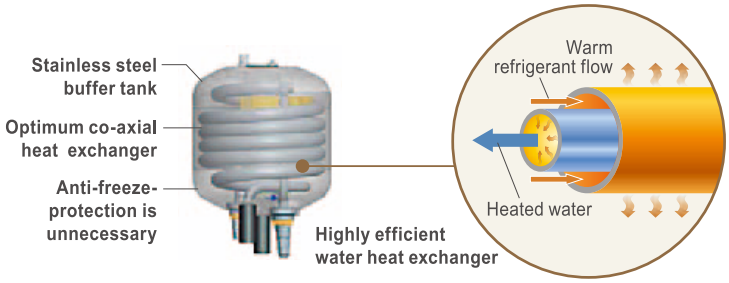

● Easy installation and maintenance

- All hydraulic safety and controlling components built in, no additional selection required
- Lifting bars for an installation without any difficulty or risk
- Easy access for maintenance operations
- Refrigerant pump down operation

● Emergency operation

System can be continuously supplied hot water by built in back up heater or boiler as emergency, even if an error is occurred.

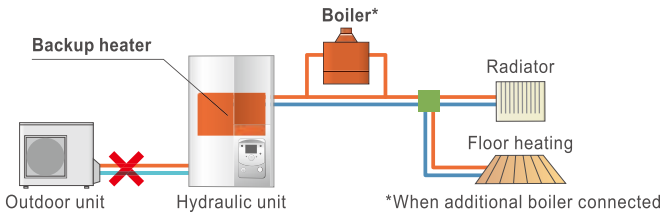

HYDRAULIC UNIT
WS∗A050-100DD6

■ OTHERS

● Automatic heating curve control

Automatic temperature regulation in accordance with heating curve (Depend on heating terminal and outdoor temperature)

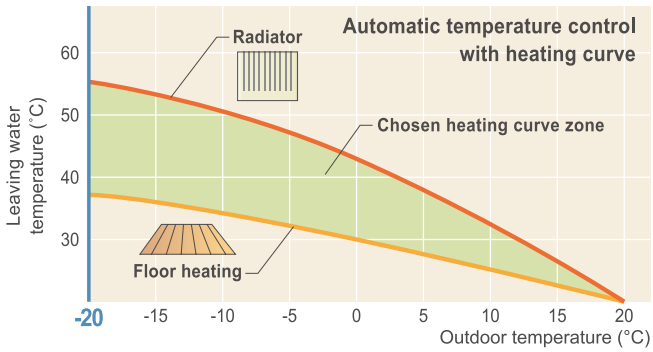

● Cooling operation is possible*

*: Optional parts are required

● Anti-Legionella function

The growth of Legionella in DHW Tank is suppressed and safe and clean hot water is supplied at all times.

● Possible to docking the boiler or electric heater for backup

● Cascade connection

Large capacities can be realized by combining up to three systems into one control circuit. Future release

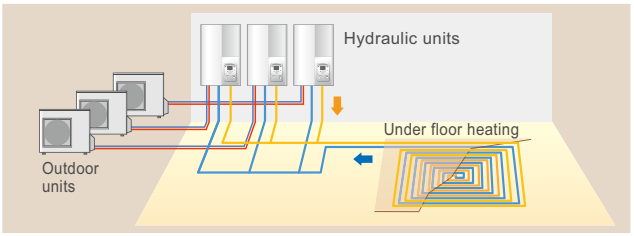

2. SPECIFICATIONS

2-1. TECHNICAL SPECIFICATIONS

Model name (Hydraulic unit)					WS∗A050DD6	WS∗A100DD6		
Model name (Outdoor unit)					WO∗A060LDC	WO∗A060LDC	WO∗A080LDC	WO∗A100LDT
Input power Enclosure	Heating	Rated		kW	0.08			
		Max. *1			6			
Casing	Colour				White			
	Material				8/10mm DC01 + EZ (5μ)			
Dimensions (H x W x D)	Net			mm	800 x 450 x 457			
	Gross				955 x 550 x 530			
Weight	Net			kg	42			
	Gross				49			
Main components	Pump	Type			Water cooled			
		Speed setting			Variable pressure / Constant pressure			
	Input power			W	70 *2			
	Water side Heat exchanger	Type			Double-tube			
		Q'ty			1			
		Water volume		l	16			
		Water flow rate Min.		l/h	490	650	810	1080
	Water flow rate Nom.	Heating		l/h	780	1040	1300	1730
		Cooling			1000	1000	1360	1700
		Insulation material			polyurethane			
	Expansion vessel	Volume		l	8			
		Max. water pressure		bar	4.5			
		Pre pressure			1 bar (+/-20%)			
Water circuit	Piping connections diameter			mm	ø25.4(ø1 in.)			
	Piping				ø25.4(ø1 in.)			
	Safety valve			bar	3			
	Manometer				Yes			
	Drain valve / Fill valve				Yes			
	Air purge valve				Yes			
Connection pipe (Refrigerant circuit)	Liquid side diameter			mm	ø6.35(ø1/4 in.)			ø9.52(ø3/8 in.)
	Gas side diameter				ø12.70(ø1/2 in.)		ø15.88(ø5/8 in.)	
	Method				Flare			
Sound pressure level	Heating			dBA	39			
Operation range	Waterside	Heating		°C	8 to 55			
Pump rank					A			

*1: With electric back-up heater.
*2: The value is at Full speed and full flow.

HYDRAULIC UNIT
WS∗A050-100DD6

2-2. ELECTRICAL SPECIFICATIONS

Model name (Hydraulic unit)				WS∗A050DD6	WS∗A100DD6		
Model name (Outdoor unit)				WO∗A060LDC	WO∗A060LDC	WO∗A080LDC	WO∗A100LDT
Electric heater	Type			Copper 9W / cm^2			
	Power supply	Phase		1			
		Frequency	Hz	50			
		Voltage	V	230			
	Current	Running current	A	26.1			
		Max. operating current (Hydraulic unit)		28.2 A + 10%			
Wiring specification (For power supply)		Main fuse (circuit breaker) current	A	32			
		Connection cable	mm^2	6.0 x 3			
Wiring specification (Hydraulic unit to outdoor unit)		Connection cable		1.5 x 4			
		Limited wiring length	m	Not available			

HYDRAULIC UNIT
WS∗A050-100DD6

HYDRAULIC UNIT
WS∗A050-100DD6

3. DIMENSIONS

3-1. DIMENSIONAL DRAWING

■ MODEL: WS∗A050DD6, WS∗A100DD6

(Unit : mm)

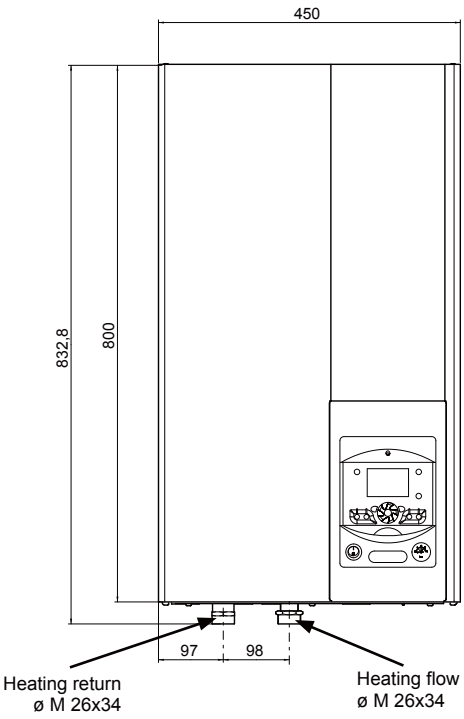

Front view

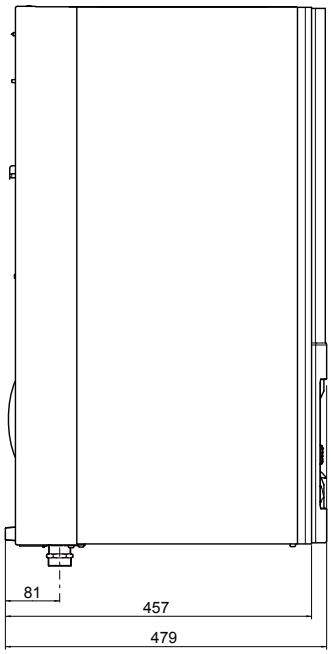

Side view

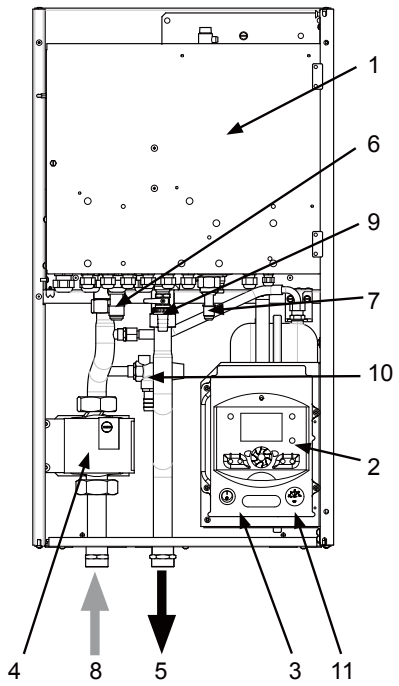

Front view

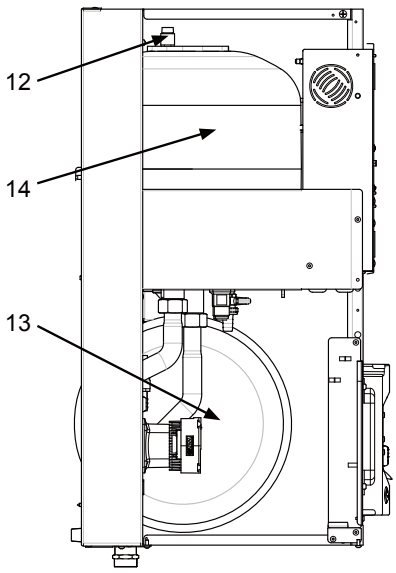

Side view

Legend :

1 -Electric box
2 -Regulator / User interface
3 -Start/stop switch
4 -Water circulation pump
5 -Water flow
6 -Gas refrigeration connection
7 -Liquid refrigeration connection
8 -Water return
9 -Drain/fill valve
10 - Safety valve
11 - Manometer
12 - Air purge valve
13 - Expansion vessel
14 - Condenser

HYDRAULIC UNIT
WS∗A050-100DD6

3-2. INSTALLATION PLACE

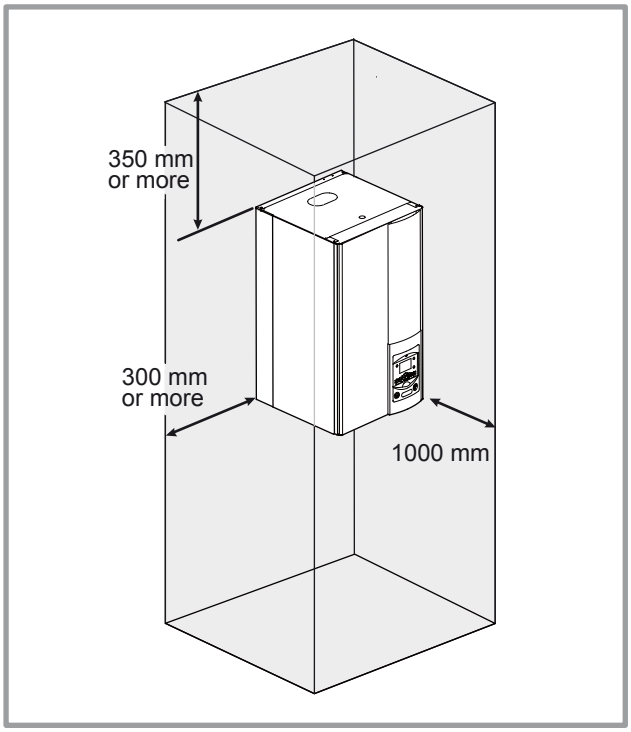

■ INSTALLATION PRECAUTIONS

- The room in which the appliance operates must comply with the prevailing regulations.
- To facilitate maintenance and to allow access to the various components, we recommend that you provide sufficient space all around the hydraulic unit.
- Be careful not to bring inflammable gas near to the heat pump during its installation, in particular when it requires brazing. The appliances are not fireproof and should not therefore be installed in a potentially explosive atmosphere.

4. PIPING DIAGRAM

■ MODEL: WS∗A050DD6, WS∗A100DD6

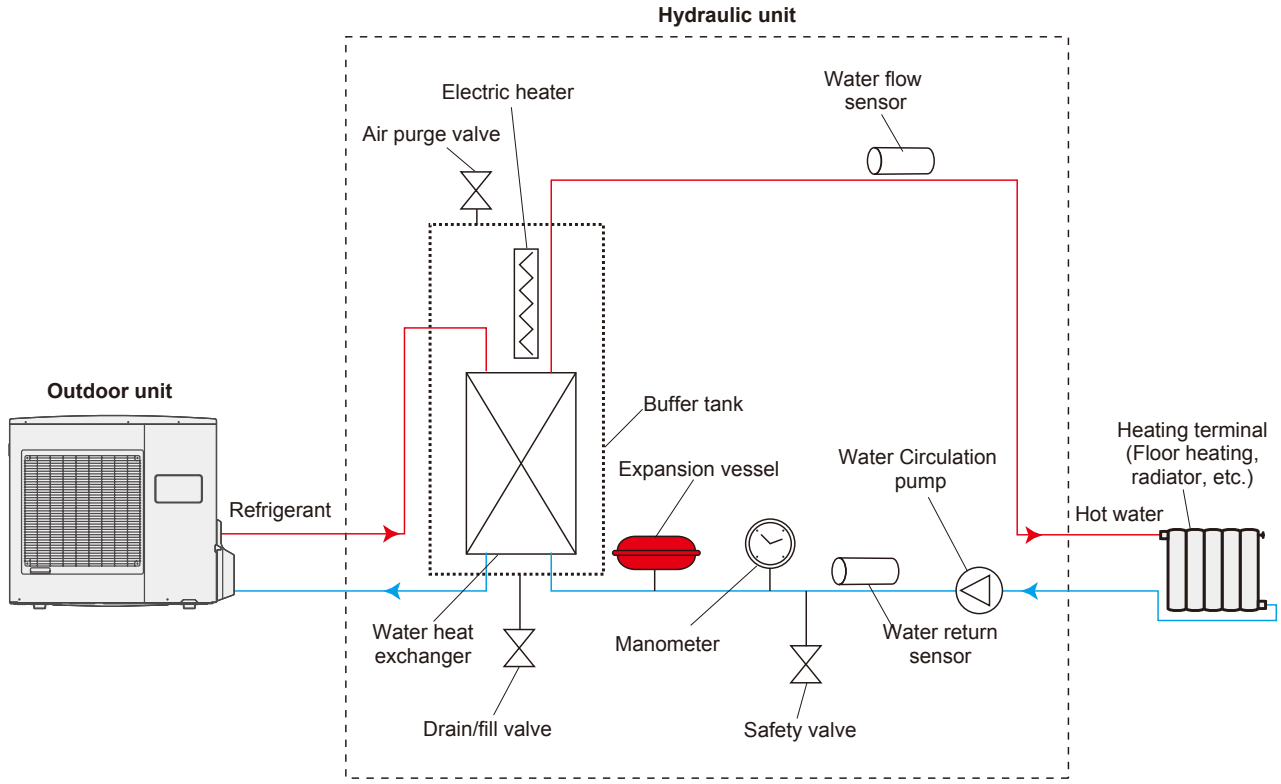

HYDRAULIC UNIT
WS∗A050-100DD6

HYDRAULIC UNIT
WS∗A050-100DD6

5. WIRING DIAGRAM

5-1. WIRING DIAGRAM

■ MODEL: WS∗A050DD6, WS∗A100DD6

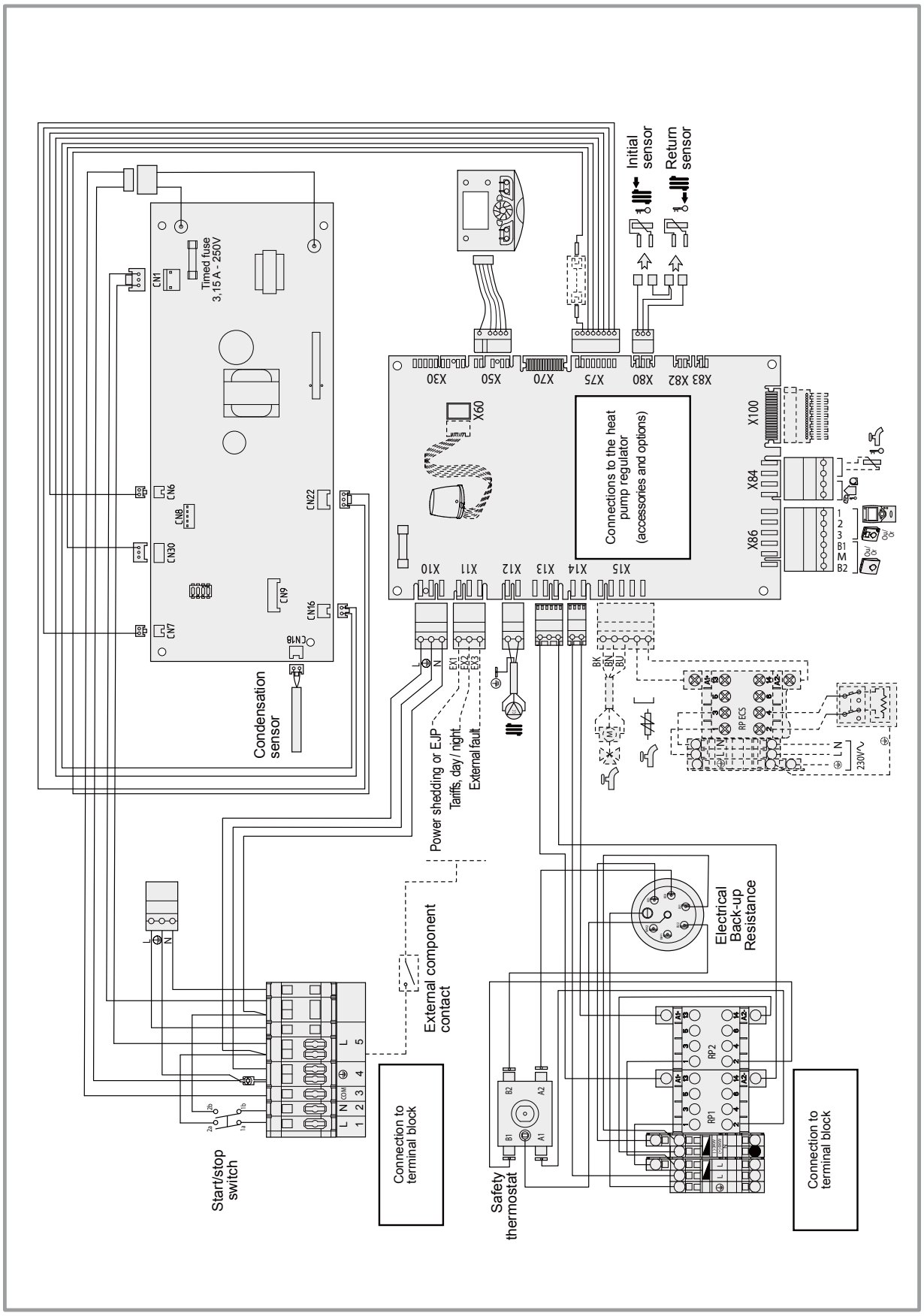

HYDRAULIC UNIT
WS∗A050-100DD6

5-2. EXTERNAL CONNECTION DIAGRAM

■ MODEL: WS∗A050DD6, WS∗A100DD6

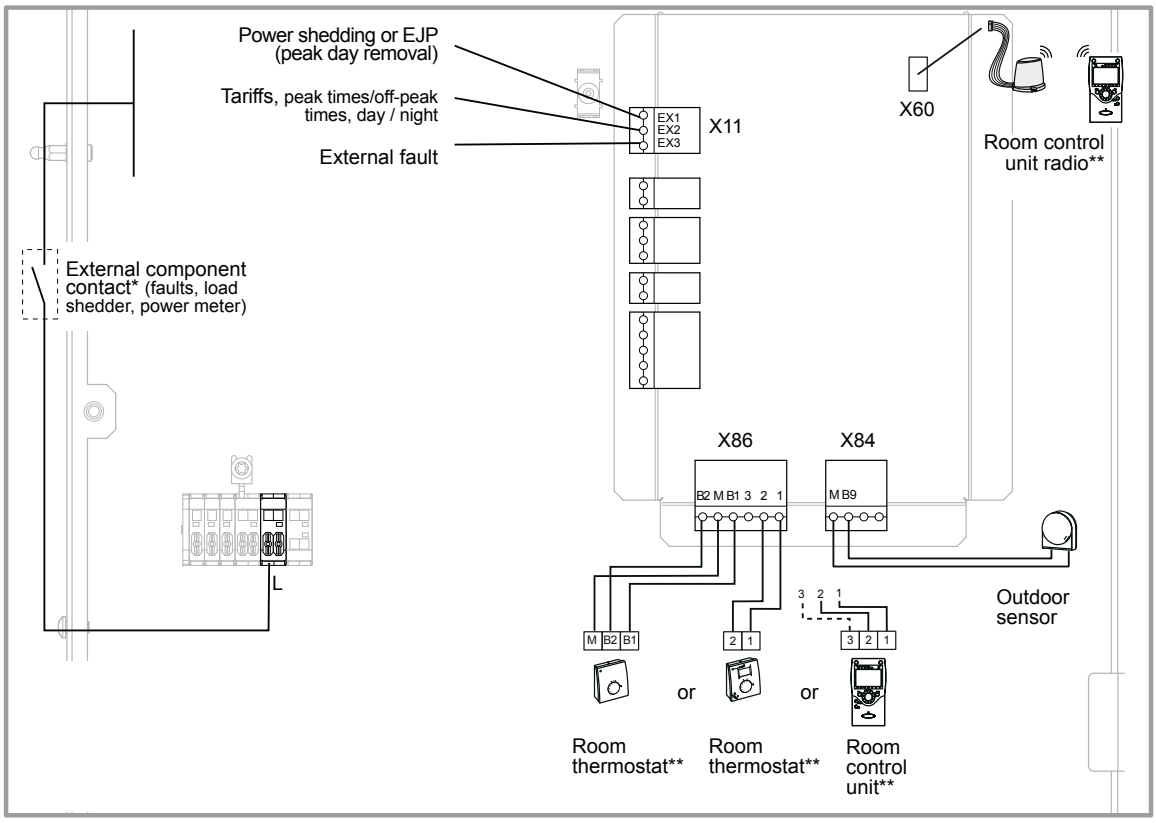

* If the control device does not provide a potential-free contact, the contact must be relayed to create equivalent wiring. In all cases, please refer to the instruction manuals for the external components (load shedder, power meters) to create the wiring.

**Option The connection of terminal 3 of the room control unit is not mandatory (lighting of the room control unit.

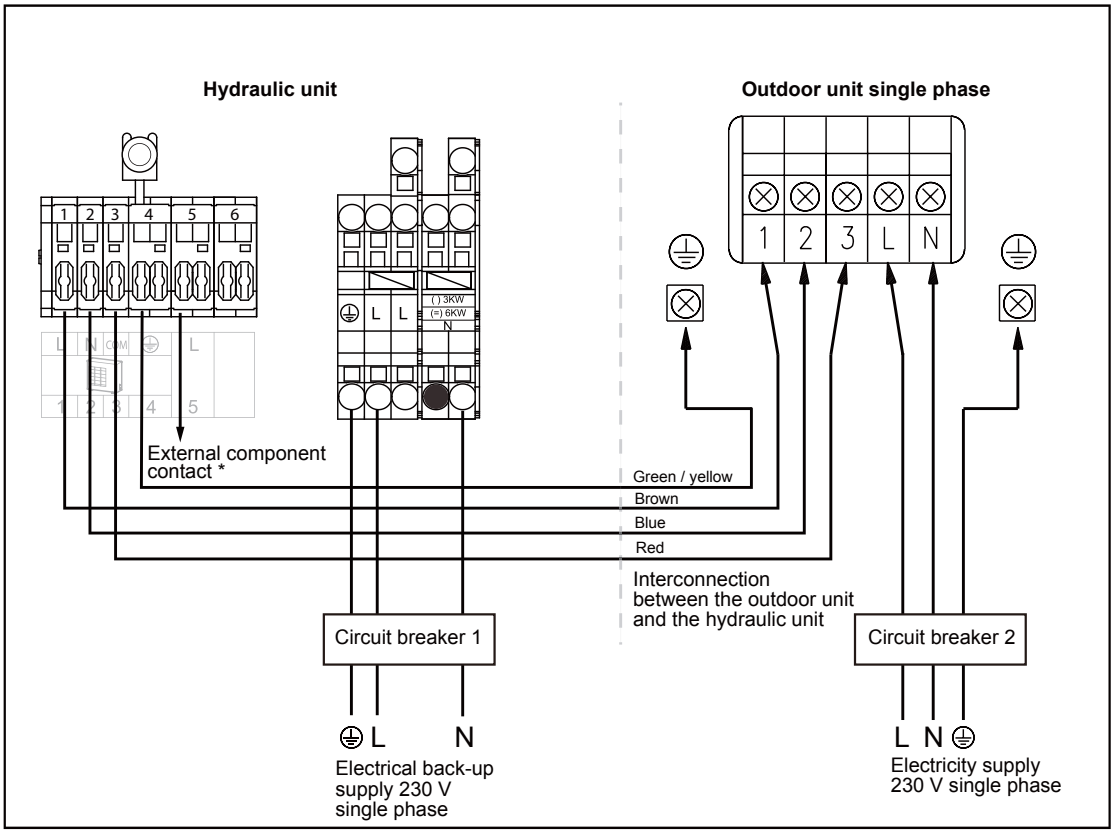

Regulation of wire size and circuit breaker differs from each locality, please refer in accordance with the regional standard.

HYDRAULIC UNIT
WS∗A050-100DD6

6. HYDRAULIC PERFORMANCE

6-1. STATIC PRESSURE DROP UNIT

■ VARIABLE PRESSURE

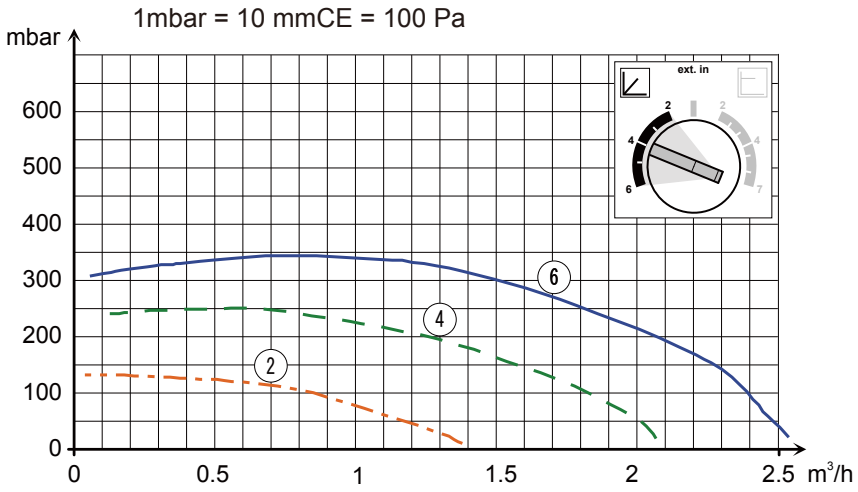

■ CONSTANT PRESSURE

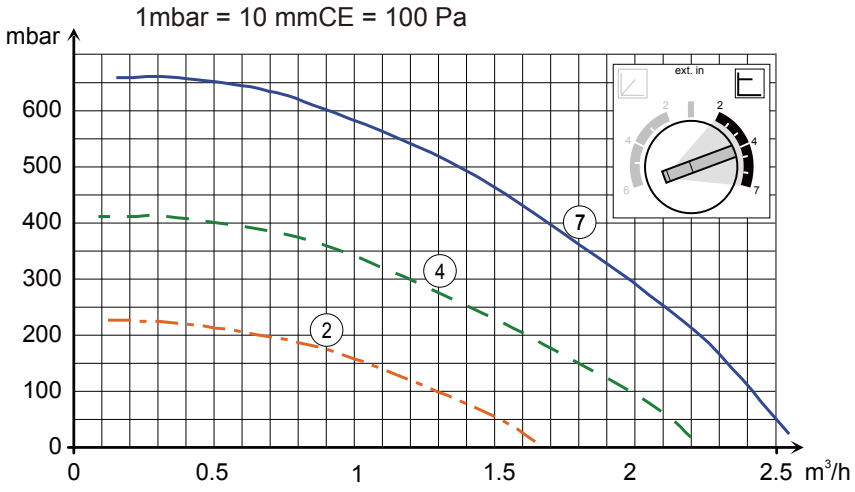

7. SAFETY DEVICES

	Protection form	Model	
		WS∗A050DD6	WS∗A100DD6
Circuit protection	Current fuse (Main PCB)	20 A	
High pressure protection	Safety valve	3 bar or more	

HYDRAULIC UNIT
WS∗A050-100DD6

8. STANDARD ACCESSORIES

Name and shape	Q'ty	Application
Installation and operating manual 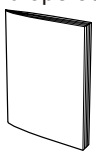	1	
Operation manual 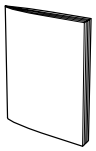	5	
Outdoor sensor 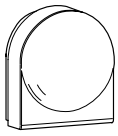	1	To monitor the outdoor temperature
Bracket 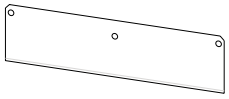	1	To secure the hydraulic model
Adaptor	2	To connect the flared connection and the hydraulic model
Nut	2	To connect the flared connection and the hydraulic model

HYDRAULIC UNIT
WS∗A050-100DD6

Refrigerant R410A INVERTER

WATERSTAGE™

3. CONTROL SYSTEM

WS*A050DD6 (Hydraulic unit)

WS*A100DD6 (Hydraulic unit)

DTW_1SP003E_02--CHAPTER03
2013.03.22

CONTENTS

3. CONTROL SYSTEM

1. FEATURES ..... CS01 - 01

2. FUNCTIONS ..... CS01 - 03
   2-1. USER INTERFACE AND REMOTE CONTROL (Optional parts) ..... CS01 - 03
   2-2. ROOM THERMOSTAT (Optional parts) ..... CS01 - 07
   2-3. CONTROL SETTING ..... CS01 - 08

3. ELECTRICAL CONNECTIONS ..... CS01 - 64
   3-1. OVERVIEW OF ALL THE ELECTRICAL CONNECTIONS ..... CS01 - 64
   3-2. ELECTRICAL CONNECTIONS ON THE HYDRAULIC UNIT ..... CS01 - 65
   3-3. CONNECTIONS TO THE HEAT PUMP REGULATOR (Accessories and options) ..... CS01 - 68

4. INSTALLATION ..... CS01 - 74
   4-1. OUTDOOR SENSOR ..... CS01 - 74
   4-2. REMOTE CONTROL (Optional parts) ..... CS01 - 75
   4-3. ROOM THERMOSTAT (Optional parts) ..... CS01 - 79
   4-4. RF MODULE (Optional parts) ..... CS01 - 81

5. DIMENSIONS ..... CS01 - 82
   5-1. OUTDOOR SENSOR ..... CS01 - 82
   5-2. REMOTE CONTROL (Optional parts) ..... CS01 - 83
   5-3. ROOM THERMOSTAT (Optional parts) ..... CS01 - 84
   5-4. RF MODULE (Optional parts) ..... CS01 - 85

6. PACKING LIST (Accessories) ..... CS01 - 87
   6-1. REMOTE CONTROL (Optional parts) ..... CS01 - 87
   6-2. ROOM THERMOSTAT (Optional parts) ..... CS01 - 87
   6-3. RF MODULE (Optional parts) ..... CS01 - 88

7. WIRING SPECIFICATIONS ..... CS01 - 89
   7-1. OUTDOOR SENSOR ..... CS01 - 89
   7-2. REMOTE CONTROL (Optional parts) ..... CS01 - 89
   7-3. ROOM THERMOSTAT (Optional parts) ..... CS01 - 89
   7-4. RF MODULE (Optional parts) ..... CS01 - 89

8. SPECIFICATIONS ..... CS01 - 90
   8-1. OUTDOOR SENSOR ..... CS01 - 90
   8-2. REMOTE CONTROL (Optional parts) ..... CS01 - 90
   8-3. ROOM THERMOSTAT (Optional parts) ..... CS01 - 90
   8-4. RF MODULE (Optional parts) ..... CS01 - 91

CONTROL SYSTEM

1. FEATURES

■ SMART & COMFORT CONTROL

The outdoor temperature is detected by sensor and the heating water temperature is controlled automatically.
The setting of room temperature and operation mode can be easily set. A wide range of control from heating to hot water supply and swimming pool is possible by combining with various optional parts.

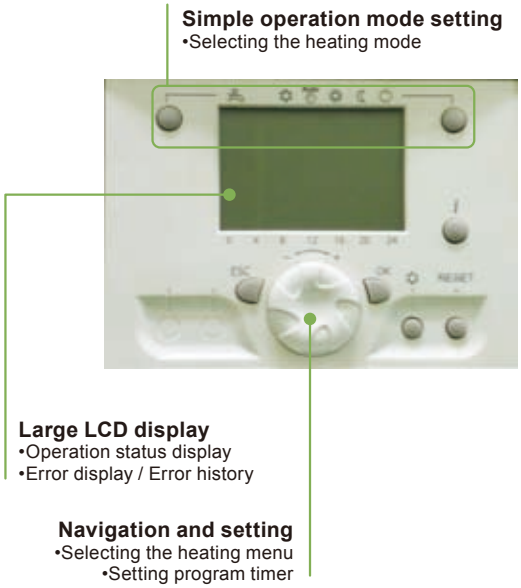

● Comfort

Flexible heating circuit

Automatic hot water temperature control matched to the application can be set.
In addition, set temperature coefficient offset can be adjusted easily high or low side matched to the usage conditions.

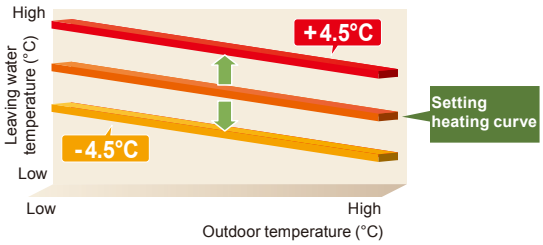

● Convenience

Programmed operation

- The setting of programmed operation can be easily set.
- Changing the heating mode linked with time is possible.

Heating mode

Automatic mode
Comfort/Reduce mode switching automatically according to outdoor temperature

Reduce mode
Constant reduce temperature

Comfort mode
Constant comfort temperature

Protection mode
Stand-by mode with anti-frost protection

Day-Weekly timer setting

- The day-weekly timer can be set up for up to 3 times per day.
- Allows separate settings for each day of the week.

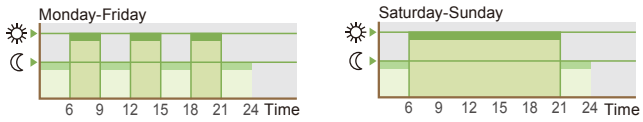

Holiday timer setting

- The holiday timer can be set up for up to 8 periods.
- If you are absent for a long time in the winter, freezing of room can be prevented.

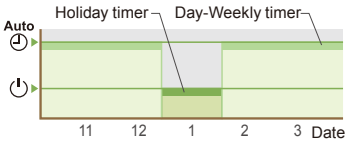

CONTROL SYSTEM

CONTROL SYSTEM

● Extendibility

Diverse operation control

Meets diverse needs by combining with optional parts.

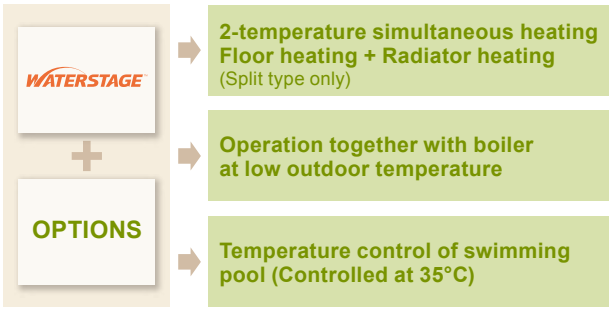

Remote controller - Extension

Optional remote controller allows controls of hot water depending on room temperature.

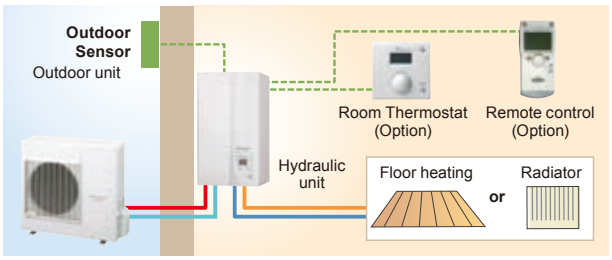

(Split type)

CONTROL SYSTEM

CONTROL SYSTEM

2. FUNCTIONS

2-1. USER INTERFACE AND REMOTE CONTROL (Optional parts)

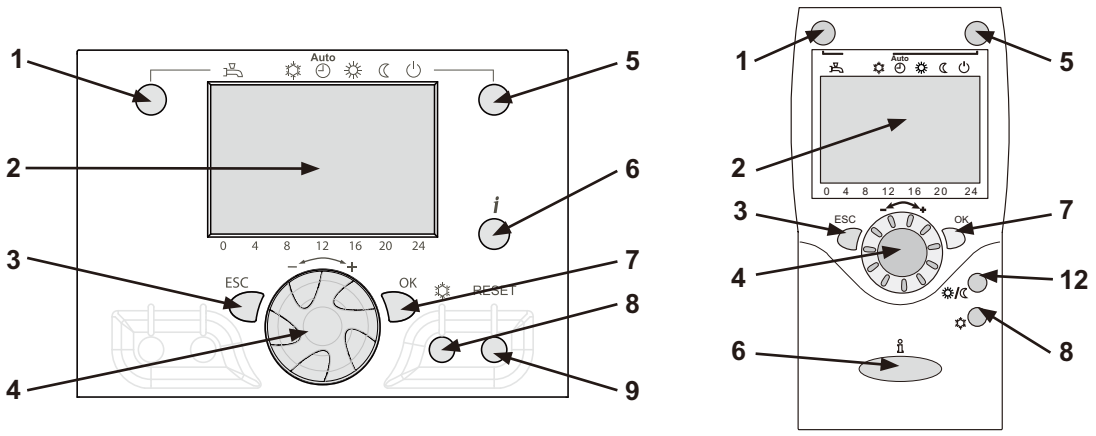

Ref .	Functions	- Definitions
1	Selecting DHW operating mode (Domestic Hot Water) On Off	- If the installation is fitted with a DHW tank. - On : Production of DHW according to the time program. - Off : Preparing the domestic hot water for stopping with the anti-frost function active. - Manual start button : Hold down the DHW key for 3 seconds. Switch from "reduced" to "comfort" until the next time the DHW timer switches over.
2	Digital display	- Operating control. Readout of the current temperature, the heating mode and any faults . - View the settings
3	Exit "ESC"	- Quit the menu.
4	Navigation and setting	- Selecting the menu. - Setting parameters. - Adjusting the ambient temperature setpoint.
5	Selecting heating mode	- Auto Heating operation according to the heating program (Summer/Winter mode switchover is automatic). - Constant comfort temperature. - ☾ Constant reduced temperature. - ⏻ Stand-by mode with anti-frost protection (Provided that the heat pump's electrical power supply is not interrupted).

CONTROL SYSTEM

CONTROL SYSTEM

Ref .	Functions	- Definitions
6	Information display	- Various data.

Designation	Line
Floor drying current setpoint	-
Current drying day	-
Terminated drying days	-
State heat pump	8006
State supplementary source	8022
State DHW	8003
State swimming pool	8011
State heating circuit 1	8000
State heating circuit 2	8001
State cooling circuit 1	8004
Outside temp	8700
Room temp 1	8740
Room setpoint 1	
Flow temp 1	8743
Flow temp setpoint 1	
Room temp 2	8770
Room setpoint 2	
Flow temp 2	8773
Flow temp setpoint 2	
DHW (domestic hot water)temp	8830
DHW temp setpoint	
Return temp HP	8410
Setpoint (return) HP	
Flow temp HP	8412
Setpoint (flow) HP	
Swimming pool temp	8900
Swimming pool temp setpoint	
Minimum remaining stop time for compressor 1	-
Minimum remaining running time for compressor 1	-

Note:
Ensure that the general electrical power supply has been cut off before starting any repair work.
When the HP is not under tension, protection frost-free is not assured.

Ref .	Functions	- Definitions

- Reading error codes

Hydraulic unit : Fault visible on the digital display.

Error number	Error contents	Error location	Heat pump operation despite the error
-	No connection	Failure to comply with room thermostat's polarity	No
10	Outdoor sensor	X86	Yes with OT = 0 °C
33	Flow sensor HP	X70	Yes
44	Return sensor HP	X70	Yes
50	DHW sensor	X84	Yes
60	Room sensor 1		Yes
65	Room sensor 2		Yes
105	Maintenance message		Yes
121	Flow temp HC1 not reached		Yes
122	Flow temp HC2 not reached		Yes
127	Anti-legionella temp not reached		Yes
369	External fault (safety component)		No
370	Outdoor unit error	See the next page	No

Hydraulic unit : Flashing of the LED visible on the interface card.

LED display		Error contents
LED 2 (green)	LED 1 (red)	
1 Flash	1 Flash	Communication error between Hydraulic unit and Outdoor unit.
4 Flashes	1 Flash	Heat pump capacity signal error (Open or short).
4 Flashes	2 Flashes	Hydraulic unit heat-exchange thermister error.
6 Flashes	4 Flashes	Active filter error. PFC error.
7 Flashes	1 Flash	Discharge thermister error.
7 Flashes	2 Flashes	Compressor thermister error.
7 Flashes	3 Flashes	Heat-exchange thermistor (outlet) error.
7 Flashes	4 Flashes	Outdoor thermistor error.
7 Flashes	7 Flashes	Heatsink thermistor error.
7 Flashes	8 Flashes	Expansion valve thermistor error.
8 Flashes	4 Flashes	Current sensor error.
8 Flashes	6 Flashes	Pressure sensor error.
9 Flashes	4 Flashes	Current trip.
9 Flashes	5 Flashes	Detection of compressor position error. / Compressor start up error.
9 Flashes	7 Flashes	Outdoor unit fan motor error.
10 Flashes	1 Flashes	Discharge temperature protection.
10 Flashes	3 Flashes	Compressor temperature protection.
10 Flashes	5 Flashes	Low pressure abnormal.
Continuous flashing (1 sec On / 1 sec Off)		Pump down operation.
Continuous lighting	Off	Defrosting.

- Information concerning maintenance, special mode.

CONTROL SYSTEM

Ref .	Functions	- Definitions
7	Confirm "OK"	- Input into the selected menu. - Confirmation of the parameter settings. - Confirmation of the adjustment to the comfort temp. setting.
8	Selecting cooling mode	- If the installation is fitted with the cooling kit : - ☼ Cooling operating according to the heating program (Summer/Winter mode switchover is automatic).
9	RESET button (Hold down the "RESET" key for less than 3 sec).	- Reinitialising the parameters and cancelling error messages. **Do not use during normal operation.**
12	Presence key	- Comfort / Reduced switchover.

CONTROL SYSTEM

2-2. ROOM THERMOSTAT (Optional parts)

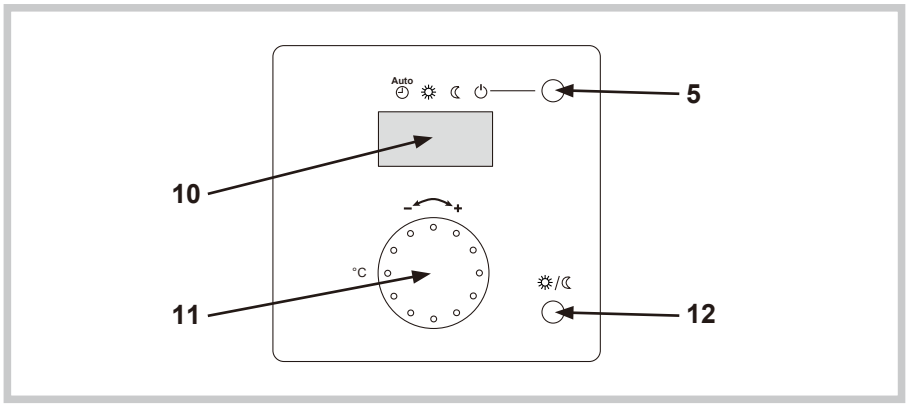

Ref .	Functions	- Definitions
5	Selecting heating mode	- Auto Heating operating according to the heating program (Summer/Winter mode switchover is automatic). - ☼ Constant comfort temperature. - ☾ Constant reduced temperature. - ⏻ Stand-by mode with anti-frost protection (Provided that the heat pump's electrical power supply is not interrupted).
10	Digital display	- Operating control. Readout of the current temperature, of the heating mode and of any faults 🔔.
11	Control knob	- Adjusting room temperature setpoint.
12	Presence key	- Comfort / Reduced switchover.

CONTROL SYSTEM

2-3. CONTROL SETTING

■ GENERAL

The settings described below are those which can be modified by the user.
We wish to remind you that changing the settings below may cause the heat pump to behave in an undesirable way. A testing period should be conducted before the permanent settings of the heat pump are confirmed. This may require a number of changes to be made by the installer.

There are 3 access levels:
U: end-user level
I: commissioning level (installer start-up)
S: engineer level (specialist)

■ SETTING PARAMETERS

-Choose the desired level.
-Scroll the menu list.
-Choose the desired menu.
-Scroll the function lines.
-Choose the desired line.
-Adjust the parameter.
-Check the setting by pressing OK.
-To return the menu, press ESC.
If no setting is made for 8 minutes, the screen returns automatically to the basic display.

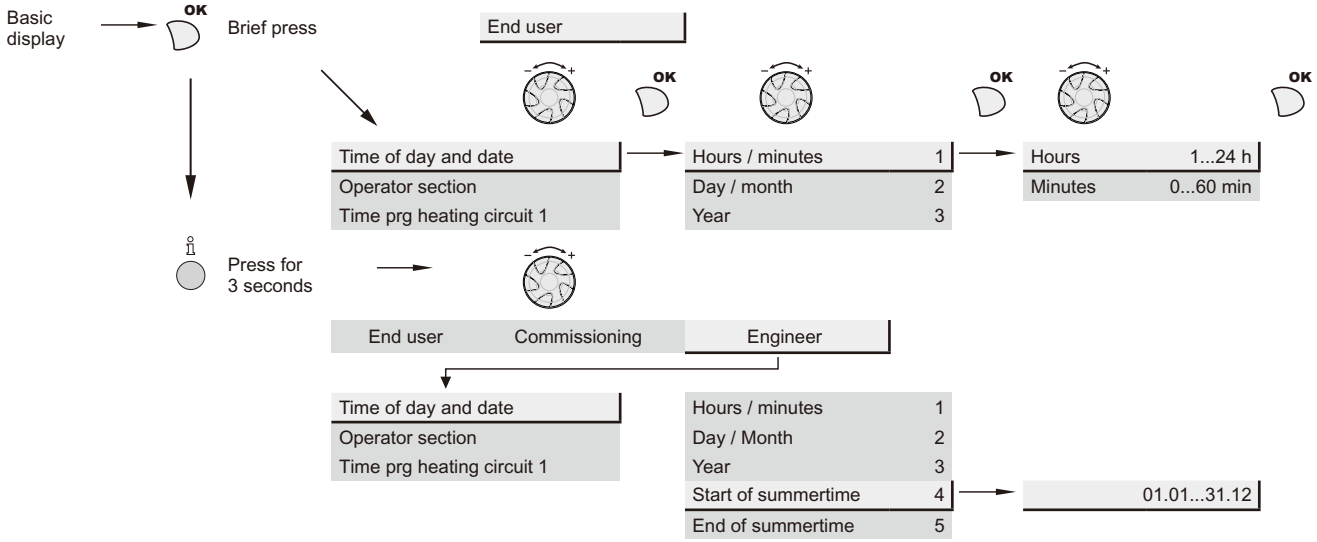

CONTROL SYSTEM

■ FUNCTION TABLE

LINE	ACCESS LEVEL	FUNCTION	SETTING RANGE OR DISPLAY	FACTORY SETTING
Time of day and date				
1	U	Hours/minutes	00:00…23:59	
2	U	Day/month	01.01…31.12	
3	U	Year	1900…2099	
5	S	Start of summertime	01.01…31.12	25.03
6	S	End of summertime	01.01…31.12	25.10
Operator section				
20	U	Language	9 Languages	English
22	S	Info	Temporarily / Permanently	Temporarily
26	S	Operation lock	Off/On	Off
27	S	Programming lock	Off/On	Off
28	S	Direct adjustment	Storage with confirmation / Autmatic storage	Storage with confirmation
29	S	Temperature unit Pressure unit	°C, °F bar, psi	°C bar
70	S	Software version (user interface)		
Time program heating circuit 1				
500	U	Preselection	Mo-Su / Mo-Fr / Sa - Su / Mo / Tu / We / Th / Fr / Sa / Su	Mo-Su
501	U	1st phase on	00:00…23:50, --:--	06:00
502	U	1st phase off	--:--, 00:10…24:00	22:00
503	U	2nd phase on	00:00…23:50, --:--	--:--
504	U	2nd phase off	--:--, 00:10…24:00	--:--
505	U	3rd phase on	00:00…23:50, --:--	--:--
506	U	3rd phase off	--:--, 00:10…24:00	--:--
515	U	Copy		
516	U	Default values, Circuit 1	No/Yes	No
Time program heating circuit 2				
520	U	Preselection	Mo-Su / Mo-Fr / Sa - Su / Mo / Tu / We / Th / Fr / Sa / Su	Mo-Su
521	U	1st phase on	00:00…23:50, --:--	06:00
522	U	1st phase off	--:--, 00:10…24:00	22:00
523	U	2nd phase on	00:00…23:50, --:--	--:--
524	U	2nd phase off	--:--, 00:10…24:00	--:--
525	U	3rd phase on	00:00…23:50, --:--	--:--
526	U	3rd phase off	--:--, 00:10…24:00	--:--
535	U	Copy		
536	U	Default values, Circuit 2	No/Yes	No

CONTROL SYSTEM

LINE	ACCESS LEVEL	FUNCTION	SETTING RANGE OR DISPLAY	FACTORY SETTING
Time program 4 / DHW				
560	U	Preselection	Mo-Su / Mo-Fr / Sa - Su / Mo / Tu / We / Th / Fr / Sa / Su	Mo-Su
561	U	1st phase on	00:00…23:50, --:--	00:00
562	U	1st phase off	--:--, 00:10…24:00	05:00
563	U	2nd phase on	00:00…23:50, --:--	--:--
564	U	2nd phase off	--:--, 00:10…24:00	--:--
565	U	3rd phase on	00:00…23:50, --:--	--:--
566	U	3rd phase off	--:--, 00:10…24:00	--:--
575	U	Copy		
576	U	Default values	No/Yes	No
Time program 5 / Cooling circuit				
600	U	Preselection	Mo-Su / Mo-Fr / Sa - Su / Mo / Tu / We / Th / Fr / Sa / Su	Mo-Su
601	U	1st phase on	00:00…23:50, --:--	08:00
602	U	1st phase off	--:--, 00:10…24:00	20:00
603	U	2nd phase on	00:00…23:50, --:--	--:--
604	U	2nd phase off	--:--, 00:10…24:00	--:--
605	U	3rd phase on	00:00…23:50, --:--	--:--
606	U	3rd phase off	--:--, 00:10…24:00	--:--
615	U	Copy		
616	U	Default values	No/Yes	No
Holidays heating circuit 1				
641	U	Preselection	Period 1…8	Period 1
642	U	Period start (Day / Month)	--:--, 01.01…31.12	--:--
643	U	Period end (Day / Month)	--:--, 01.01…31.12	--:--
648	U	Operating level	Frost protection / Reduced	Frost protection
Holidays heating circuit 2				
651	U	Preselection	Period 1…8	Period 1
652	U	Period start (Day / Month)	--:--, 01.01…31.12	--:--
653	U	Period end (Day / Month)	--:--, 01.01…31.12	--:--
658	U	Operating level	Frost protection / Reduced	Frost protection
Heating circuit 1				
710	U	Comfort setpoint	Reduced temp to 35.0°C	20.0°C
712	U	Reduced setpoint	Frost protection temp to comfort temp	19.0°C
714	U	Frost protection setpoint	4°C to reduced tempt	8.0°C
716	S	Comfort setpoint maximum	20.0…35.0°C	28.0°C
720	I	Heating curve slope	0.10…4.00	0.50
721	I	Heating curve displacement	-4.5…4.5°C	0.0°C
730	I	Summer/winter heating limit	---, 8.0…30.0°C	18.0°C
740	I	Flow temp setpoint min (for fan convectors)	8...95°C	8°C
741	I	Flow temp setpoint max	8...95°C	55°C
750	S	Room influence	---, 1...100%	50%

CONTROL SYSTEM

LINE	ACCESS LEVEL	FUNCTION	SETTING RANGE OR DISPLAY	FACTORY SETTING
760	S	Room temp limitation	0.5…4°C	0.5°C
780	S	Quick setback	Off Down to reduced setpoint Down to frost prot setpoint	Down to reduced setpoint
790	S	Optimum start control max	0…360min	180 min
791	S	Optimum stop control max	0…360min	60 min
800	S	Reduced setpoint increase start	-30…10°C	---°C
801	S	Reduced setpoint increase end	-30…10°C	-5°C
830	S	Mixer valve boost	0…50°C	0°C
834	S	Actuator running time	30…873sec	240sec
850	I	Floor curing function	0…5	Off
851	I	Floor curing setpoint manually	0…95°C	25°C
856	I	Floor curing day current	0...32	0
857	I	Floor curing days completed	0...32	0
900	S	Operating mode changeover		Protection mode
Cooling circuit 1				
901	U	Operating mode	Off / Automatic	Automatic
902	U	Comfort setpoint	15.0…40.0°C	24.0°C
907	U	Release	24h/day Time program HC Time program 5	24h/day
908	I	Flow temp setpoint at OT 25°C	6.0…35.0°C	20.0°C
909	I	Flow temp setpoint at OT 35°C	6.0…35.0°C	16.0°C
912	I	Cooling limit at OT	---, 8.0…35.0°C	20.0°C
913	S	Lock time at end of heating	---, 8…100h	24h
918	S	Summer compensation start at OT	20…50°C	26°C
919	S	Summer compensation end at OT	20…50°C	35°C
920	S	Summer compensation setpoint increase	---, 1.0…10.0°C	4.0°C
923	S	Flow temp setpoint min OT 25°C	6.0…35.0°C	18.0°C
924	S	Flow temp setpoint min OT 35°C	6.0…35.0°C	18.0°C
928	S	Room influence	---, 1…100%	80%
932	S	Room temp limitation	---, 0.0…4.0°C	0.5°C
938	S	Mixing valve decrease	0…20°C	0°C
941	S	Actuator running time	30…650sec	120sec
945	S	Mixing valve heating mode	Control / Open	Open
963	S	With primary controller/system pump	No/Yes	No

CONTROL SYSTEM

LINE	ACCESS LEVEL	FUNCTION	SETTING RANGE OR DISPLAY	FACTORY SETTING
Heating circuit 2				
1010	U	Comfort setpoint	Reduced temp to 35.0°C	20.0°C
1012	U	Reduced setpoint		19.0°C
1014	U	Frost protection setpoint	4°C to reduced temp	8.0°C
1016	S	Comfort setpoint maximum	20.0…35.0°C	28.0°C
1020	I	Heating curve slope	0.10…4.00	0.50
1021	I	Heating curve displacement	-4.5…4.5°C	0.0°C
1030	I	Summer/winter heating limit	---, 8.0…30.0°C	18.0°C
1040	I	Flow temp setpoint min (for fan convectors)	8…95°C	8°C
1041	I	Flow temp setpoint max	8…95°C	55°C
1050	S	Room influence	---, 1...100%	50%
1060	S	Room temp limitation	0.5…4°C	0.5°C
1080	S	Quick setback	Off Down to reduced setpoint Down to frost prot setpoint	Down to reduced setpoint
1090	S	Optimum start control max	0…360min	180 min
1091	S	Optimum stop control max	0…360min	60 min
1100	S	Reduced setpoint increase start	-30…10°C	---°C
1101	S	Reduced setpoint increase end	-30…10°C	-5°C
1130	S	Mixer valve boost	0…50°C	0°C
1134	S	Actuator running time	30…873sec	240sec
1150	I	Floor curing function		Off
1151	I	Floor curing setpoint manually	0…95°C	25°C
1156	I	Floor curing day current	0…32°C	---°C
1157	I	Floor curing days completed	0…32	0
1200	S	Operating mode changeover		Protection mode
Domestic hot water				
1610	U	Nominal setpoint	Thc…65°C	55°C
1612	U	Reduced setpoint	8°C….Thc	40°C
1620	I	Release of DHW load	24h/day Heating circ time pgms Time program 4/DHW Off-peak rate 4: Time pgm 4/DHW or Off-peak rate	Time program 4/DHW
1640	I	Legionella function	Off Periodically Fixed weekday	Off
1641	S	Legionella function periodically	1…7	7
1642	I	Legionella function weekday	Monday…Sunday	Sunday

CONTROL SYSTEM

LINE	ACCESS LEVEL	FUNCTION	SETTING RANGE OR DISPLAY	FACTORY SETTING
Swimming pool				
2056	U	Setpoint source heating	8.0…80.0°C	22.0°C
Heat pump				
2803	S	Overrun time cond pump	0…240s	240s
2843	S	Compressor off time min	0…120min	8min
2844	S	Switch-off temp max	8…100°C	75°C
2862	S	Locking time stage 2	0…40min	5min
2873	S	Compressor mod run time	10…240s	240s
2882	S	Release integral electric flow	0…500°Cmin	100°Cmin
2884	S	Release electric flow below OT	---, -30…30°C	2°C
2886	S	Compensation heat deficit	Off On Only with floor curing fct	Off
2916	S	Max setpoint HP DHW charg	---, 8… 80°C	58°C
2920	S	With electrical utility lock	Locked / Release	Released
Supplementary source				
3700	S	Release below outside temp	---, -50…50°C	2.0°C
3701	S	Release above outside temp	---, -50…50°C	
3705	S	Overrun time	0...120min	20min
3720	S	Switching integral (for boiler relief)	0...500°Cmin	100°Cmin
3723		Locking time	0...120min	30min
DHW storage tank				
5024	S	Switching differential	0…20°C	7°C
5030	S	Charging time limitation	---, 10…600min	90min
5055	S	Recooling temp	8…95°C	65°C
5057	S	Recooling collector	Off Summer Always	Summer
5061	S	Electric immersion heater release	24h/day DHW release Time program 4/DHW	DHW release
5093	S	Not used		

CONTROL SYSTEM

LINE	ACCESS LEVEL	FUNCTION	SETTING RANGE OR DISPLAY	FACTORY SETTING
Configuration				
5700	I	Pre-setting	---, 1…12	1
5710	I	Heating circuit 1	Off / On	On
5711	I	Cooling circuit 1	Off 4-pipe system 2-pipe system	Off
5715	I	Heating circuit 2	Off / On	On
5731	I	DHW ctrl elem Q3	No charging request ¦ Charging pump ¦ Diverting valve	Diverting valve
5806	I	Type el imm heater flow	1 : 3-stage 2 : 2-stage excluding 3 : 2-stage complementary 4 :Modulating UX	3 : 2-stage complementary
5981	S	Cont type input EX1	NC (Normally-closed contact) NO (Normally-opened contact)	NO
5983	S	Cont type input EX2	NC (Normally-closed contact) NO (Normally-opened contact)	NC
5985	S	Cont type input EX3	NC (Normally-closed contact) NO (Normally-opened contact)	NO
6098	S	Not used	-20…20°C	0°C
6100	S	Readjustment outside sensor	-3…3°C	0°C
6120	S	Frost protection plant	Off / On	On
6205	S	Reset to default parameters	No/Yes	No
6220	S	Software version	0…99	---
6420	I	Function input H33 Optg mode change HCs+DHW / Optg mode changeover DHW / Optg mode changeover HCs / Optg mode changeover HC1 / Optg mode changeover HC2 / Error/alarm message / Release swi pool source heat / Release swi pool solar / Dewpoint monitor		Dewpoint monitor
6421	I	Contact type H33	NC (Normally-closed contact) NO (Normally-opened contact)	NO
LPB system				
6600	I	Not used	0…16	1
Error				
6711	U	Reset HP	No/Yes	No
6800	S	History 1	Date/Time/Code	
6802	S	History 2	Date/Time/Code	
6804	S	History 3	Date/Time/Code	
6806	S	History 4	Date/Time/Code	
6808	S	History 5	Date/Time/Code	
6810	S	History 6	Date/Time/Code	
6812	S	History 7	Date/Time/Code	
6814	S	History 8	Date/Time/Code	
6816	S	History 9	Date/Time/Code	
6818	S	History 10	Date/Time/Code	

CONTROL SYSTEM

LINE	ACCESS LEVEL	FUNCTION	SETTING RANGE OR DISPLAY	FACTORY SETTING
Service / special operation				
7070	S	HP interval	---, 1..240 months	---months
7071	S	HP time since maintenance	0...240months	0months
		Reset?	Yes / No	Yes
7073	S	Cur starts compressor 1/hrs run	0.0...12.0	0
		Reset?	Yes / No	Yes
7141	U	Emergency operation	Off / On	Off
7142	S	Emergency operating function type	Manually / Automatically	Manually
7150	I	Simulation outside temp	---, -50…50°C	---°C
Input / output test				
7700	I	Relay test	No test Everything off Relay output QX1 Relay output QX2 Relay output QX3 Relay output QX4 Relay output QX5 Relay output QX6 Relay output QX31 Relay output QX32 Relay output QX33 Relay output QX34 Relay output QX35 Relay output QX36 Relay output QX21 module 1 Relay output QX22 module 1 Relay output QX23 module 1 Relay output QX21 module 2 Relay output QX22 module 2 Relay output QX23 module 2	No test
7710	I	Output test UX1	---, 0…100%	---%
7712	I	PWM-Signal UX1	---, 0…100%	---%
7716	I	Output test UX2	---, 0…100%	---%
7719	I	PWM-Signal UX2	---, 0…100%	---%
7722	I	Cooling mode DO2	Off / On	Off
7723	I	Heat pump D3	Off / On	Off
7724	I	Output test UX3	---, 0…100%	---%
7725	I	Voltage value UX3	---, 0…100%	---%
7820	I	Sensor temp BX1	-28…350°C	---°C
7821	I	Sensor temp BX2	-28…350°C	---°C
7822	I	Sensor temp BX3	-28…350°C	---°C
7823	I	Sensor temp BX4	-28…350°C	---°C
7824	I	Sensor temp BX5	-28…350°C	---°C
7825	I	Sensor temp BX6	-28…350°C	---°C
7830	I	Sensor temp BX21 module 1	-28…350°C	---°C
7832	I	Sensor temp BX21 module 2	-28…350°C	---°C
7849	I	Contact status H2, module 2	Open/Closed	Open
7911	I	Input EX1	0/230V	0V
7912	I	Input EX2	0/230V	0V
7913	I	Input EX3	0/230V	0V
7973	I	Sensor temp BX31	-28…350°C	---°C
7974	I	Sensor temp BX32	-28…350°C	---°C
7975	I	Sensor temp BX33	-28…350°C	---°C
7976	I	Sensor temp BX34	-28…350°C	---°C
7977	I	Sensor temp BX35	-28…350°C	---°C

CONTROL SYSTEM

LINE	ACCESS LEVEL	FUNCTION	SETTING RANGE OR DISPLAY	FACTORY SETTING
7978	I	Sensor temp BX36	-28…350°C	---°C
7996	I	Contact state H33	Open/Closed	Open
State of plant				
8000	I	State heating circuit 1		---
8001	I	State heating circuit 2		---
8003	I	State DHW		---
8004	I	State cooling circuit 1		---
8006	I	State heat pump		---
8007	I	Not used		---
8010	I	Not used		---
8011	I	State swimming pool		---
8022	I	State supplementary source		---
Diagnostics heat generation				
8402	I	Electric immersion heater flow 1	Off/On	Off
8403	I	Electric immersion heater flow 2	Off/On	Off
8406	I	Condenser pump	Off/On	Off
8410	U	Return temp HP	0.0…140.0°C	---
		Setpoint HP	0.0…140.0°C	---
8412	U	Flow temp HP	0.0…140.0°C	---
		Setpoint HP	0.0…140.0°C	---
8413	U	Compressor modulation	0…100%	---
8414	I	Modulation electric flow	0…100%	---
8425	I	Temp differential condenser	-50…140°C	---
8454	S	Locking time HP	0…2730h	---
		Reset?	Yes / No	Yes
8455	S	Counter number of locks HP	0…65535	---
		Reset?	Yes / No	Yes
8456	S	Hours run electric flow	0…2730h	---
		Reset?	Yes / No	Yes
8457	S	Start counter electric flow	0…65535	---
		Reset?	Yes / No	Yes
Diagnostics consumers				
8700	U	Outside temp	-50…50°C	0°C
8701	U	Outside temp min	-50…50°C	50°C
		Reset?	Yes / No	Yes
8702	U	Outside temp max	-50…50°C	-50°C
		Reset?	Yes / No	Yes
8703	I	Outside temp attenuated *1	-50…50°C	0°C
		Reset?	Yes / No	Yes
8704	I	Outside temp composite *2	-50…50°C	0°C
8730	I	Heating circuit pump, circuit 1	Off / On	Off
8731	I	Mixer valve HC1 open	Off / On	Off
8732	I	Mixer valve HC1 closed	Off / On	Off

CONTROL SYSTEM

LINE	ACCESS LEVEL	FUNCTION	SETTING RANGE OR DISPLAY	FACTORY SETTING
8740	U	Room temp 1	0.0…50.0°C	---
		Room setpoint 1	4.0…35.0°C	20.0°C
8743	U	Flow temp 1	0.0…140.0°C	---
		Flow temp setpoint 1	0.0…140.0°C	---
8756	U	Flow temp cooling 1	0.0…140.0°C	---
		Flow temp setpoint cooling 1	0.0…140.0°C	---
8760	I	Heating circuit pump, circuit 2	Off / On	Off
8770	U	Room temp 2	0.0…50.0°C	20.0°C
		Room setpoint 2	4.0…35.0°C	20.0°C
8773	U	Flow temp 2	0.0…140.0°C	---
		Flow temp setpoint 2	0.0…140.0°C	---
8820	I	DHW pump	Off / On	Off
8821	I	Electric immersion heater DHW	Off / On	Off
8830	U	DHW temp	0.0…140.0°C	0.0°C
		DHW temp setpoint	8.0…80.0°C	50.0°C
8840	S	Hours run DHW pump	0…2730h	---
		Reset?	Yes / No	Yes
8841	S	Start counter DHW pump	0…2730h	---
		Reset?	Yes / No	Yes
8842	S	Hours run electric heater DHW	0…2730h	---
		Reset?	Yes / No	Yes
8843	S	Start counter electric heater DHW	0…65535	---
		Reset?	Yes / No	Yes
8900	U	Swimming pool temp	0.0…140.0°C	---
		Swimming pool setpoint	8.0…80.0°C	22.0°C
8950	S	Common flow temp	0.0…140.0°C	---
		Common flow temp setpoint	0.0…140.0°C	---
8957	S	Common flow setpoint refrig	0.0…140.0°C	---
9031	I	Relay output QX1	Off / On	On
9032	I	Relay output QX2	Off / On	On
9033	I	Relay output QX3	Off / On	On
9034	I	Relay output QX4	Off / On	Off
9035	I	Relay output QX5	Off / On	Off
9050	I	Relay output QX21 module 1	Off / On	Off
9051	I	Relay output QX22 module 1	Off / On	Off
9052	I	Relay output QX23 module 1	Off / On	Off
9053	I	Relay output QX21 module 2	Off / On	Off
9054	I	Relay output QX22 module 2	Off / On	Off
9055	I	Relay output QX23 module 2	Off / On	Off
9071	U	Relay output QX31	Off / On	On
9072	U	Relay output QX32	Off / On	On
9073	U	Relay output QX33	Off / On	Off
9074	U	Relay output QX34	Off / On	Off
9075	U	Relay output QX35	Off / On	Off

CONTROL SYSTEM

Description of abbreviations :
HC = Heating circuit
OT = Outside temperature
HP = Heat pump
DHW = Domestic hot water
BXx, EXx, QXx, DOx, UXx, Hx = Terminal number

*1: " Outside temperature attenuated " is calculated by means of filtered outdoor temperature and the building time constant (building's thermal inertia).

*2: " Outside temperature composite " is calculated by means of the filtered outdoor temperature, the building time constant and the actual outside temperature.

CONTROL SYSTEM

■ ADJUSTMENT FUNCTION DETAILS

● Time of day and date functions

The controller has an annual clock which contains the time, the day of the week and the date.

In order for the function to operate, the time and date must be set properly on the clock.

LINE	FUNCTION
1	Hours / minutes
2	Day / month
3	Year
5	Start of summertime
6	End of summertime

Note:
Summer time/winter time change
Dates have been set for changing to summer time or to winter time. The time changes automatically from 2am (winter time) to 3am (summer time) or from 3am (summer time) to 2am (winter time) on the first Sunday following the respective date.

CONTROL SYSTEM

● Operator section functions

LINE	FUNCTION
20	Language
22	Info
26	Operation lock
27	Programming lock
28	Direct adjustment
29	Temperature unit Pressure unit

Info

• Temporarily

After pressing the Info key, the information display returns "predefined" basic display after 8 minutes or when pressing the operating mode key.

• Permanently

After pressing the Info key, the information display returns to "new" basic display after a maximum of 8 minutes. The last selected information value is shown in the new basic display.

Operation lock

If the operating lock is activated, the following control elements can no longer be adjusted: Heating circuit mode, DHW mode, room temp comfort setpoint (knob), occupancy key.

Programming lock

If the programming lock is activated, the setting values are displayed but may no longer be changed.

Temporary suspension of programming:
The programming lock can be temporarily deactivated at programming level. To do this, simultaneously press OK and ESC keys for at least 3 seconds. The temporary suspension of the programming lock remains in effect until you exit the programming.

Permanent suspension of programming:
First perform a temporary suspension, then cancel "Programming lock" on line 27.

Direct adjustment

• Storage with confirmation

Correction of the setpoint with the knob will be adopted only after pressing OK key.

• Automatic storage

Correction of the setpoint with the knob is adopted without a particular confirmation (timeout) or by pressing OK key.

Heating Circuit Assignment

LINE	FUNCTION
70	Software version (user interface)

* applies only to Remote control C75

Software version (user interface)

The display shows the current version of the user interface.

CONTROL SYSTEM

● Time program functions (Heating circuit 1 & 2, DHW, Cooling)

Several control programs are available for the heating circuits and the production of DHW. They are initiated in "Automatic" mode and control the change in temperature levels (and therefore the associated setpoints, reduced and comfort) via the adjusted changeover times.

Enter changeover times:
Changeover times can be adjusted in a combined way, i.e., identical times for several days or distinct times for certain days. Preselecting groups of days (e.g., Mon...Fri and Sat...Sun) having the same changeover times make adjustment of the changeover program considerably shorter.

Changeover Points

LINE				FUNCTION
HC1	HC2	4/DHW	5	
500	520	560	600	Preselection (Mo-Su / Mo-Fr / Sa – Su / Mo...Su)
501	521	561	601	1st phase on
502	522	562	602	1st phase off
503	523	563	603	2nd phase on
504	524	564	604	2nd phase off
505	525	565	605	3rd phase on
506	526	566	606	3rd phase off

Standard Program

LINE	FUNCTION
516, 536, 576, 616	Default values (No /Yes)

All time programs can be reset to factory settings. Each time program has its own programming line for this reset action.

In this case, individual settings will be lost!

Holidays

LINE		FUNCTION
HC1	HC2	
641	651	Preselection
642	652	Period start (Day / Month)
643	653	Period end (Day / Month)
648	658	Operation level

The holiday program enables changing the heating circuits over to a selected operating level according to the date (calendar).

Important:
The holiday program can be used only in the automatic mode.

CONTROL SYSTEM

● Heating circuit 1 & 2 functions

Operating Mode

For heating circuits there are several functions available which can be individually adjusted for each heating circuit.

The programming lines for the 2nd heating circuit are displayed only if the extension module has been connected to the controller.
Operation of heating circuits 1 and 2 is directly controlled via the operating mode key.

Setpoint Values

LINE		FUNCTION
HC1	HC2	
710	1010	Comfort setpoint
712	1012	Reduced setpoint
714	1014	Frost protection setpoint
716	1016	Maximum comfort setpoint

Room temperature:
Room temperature can be set according to different setpoint values. Depending on the selected mode, these setpoints are activated and provide different temperature levels in the rooms.

The ranges of configurable setpoints are defined by their interdependencies, as shown in the graph below.

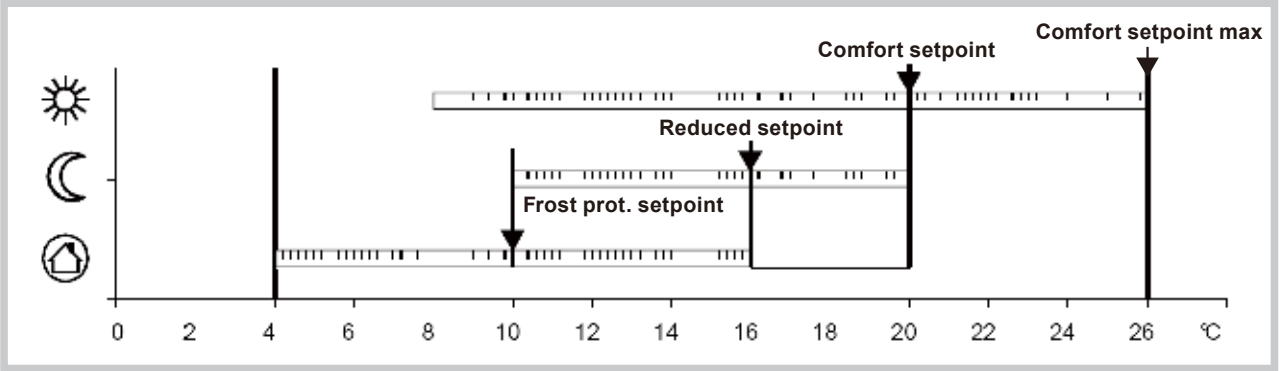

Frost protection:
The protection mode automatically prevents an excessively sharp drop in room temperature.

In this case the control adopts the frost protection room setpoint.

Heating Curve

LINE		FUNCTION
HC1	HC2	
720	1020	Heating curve slope
721	1021	Heating curve displacement

CONTROL SYSTEM

Heating curve slope

Based on the heating characteristic, the controller computes the flow temperature setpoint which will be used for controlling the flow temperature in consideration of atmospheric conditions. Different settings can be used to adapt the heating characteristic so that the heating capacity, and therefore the room temperature, will match the individual needs.
The colder the outdoor temperature, the greater the extent to which the slope will modify the flow temperature. In other words, the slope should be corrected if the room temperature shows a difference when the outdoor temperature is low, but not when it is high.

- Increase the setting:
  The flow temperature is increased mainly when the outdoor temperatures are low.
- Decrease the setting:
  The flow temperature is lowered mainly when the outdoor temperatures are low.

Warning:
The heating curve is adjusted in relation to a room temperature setpoint of 20°C. If the room temperature setpoint is modified, the flow temperature setpoint is automatically recomputed. This will not modify the setting and amounts to automatically adapting the curve.

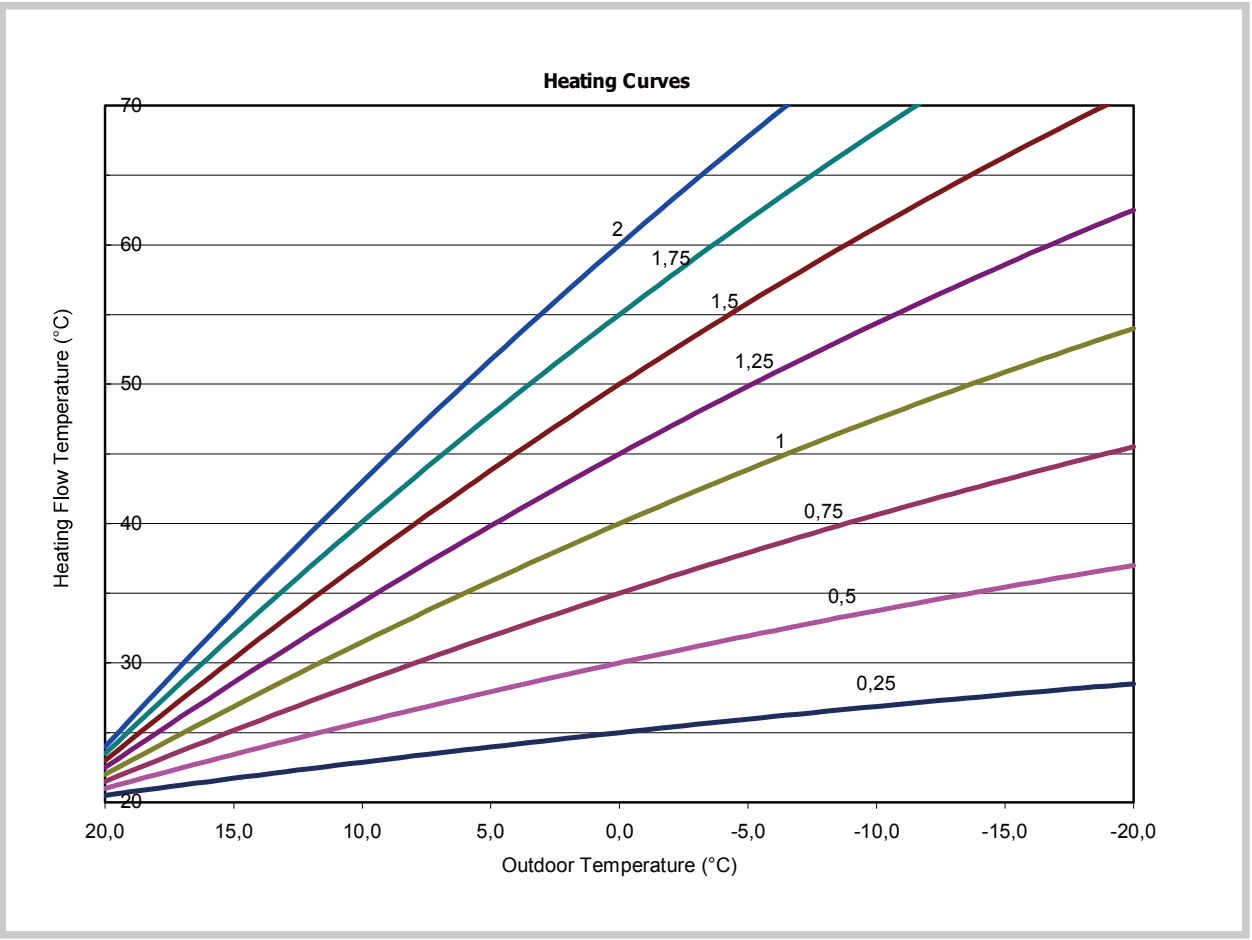

Heating curve displacement

The curve displacement (offset) modifies the flow temperature in a general and even manner over the full range of outdoor temperature. In other words, the displacement should be corrected when the room temperature is generally too high or too low.

CONTROL SYSTEM

Eco Functions

LINE		FUNCTION
HC1	HC2	
730	1030	Summer/winter heating limit

Summer/winter heating limit

The summer/winter heating limit switches the heating on or off through the year according to the temperature ratio. Changeover is performed automatically when in automatic mode and thus avoids the user having to turn the heating on or off. Changing the input value makes the respective annual periods (summer/winter) shorter or longer.

- If the value is increased:
  Changing to winter operating mode is advanced, changing to summer mode is delayed.
- If the value is decreased:
  Changing to winter mode is delayed; changing to summer mode is advanced.

Information:
This function does not work in "Continuous comfort temperature" mode. (Sunlight)
The controller displays "ECO".
The outdoor temperature is attenuated to take the building's dynamics into account.

Example:

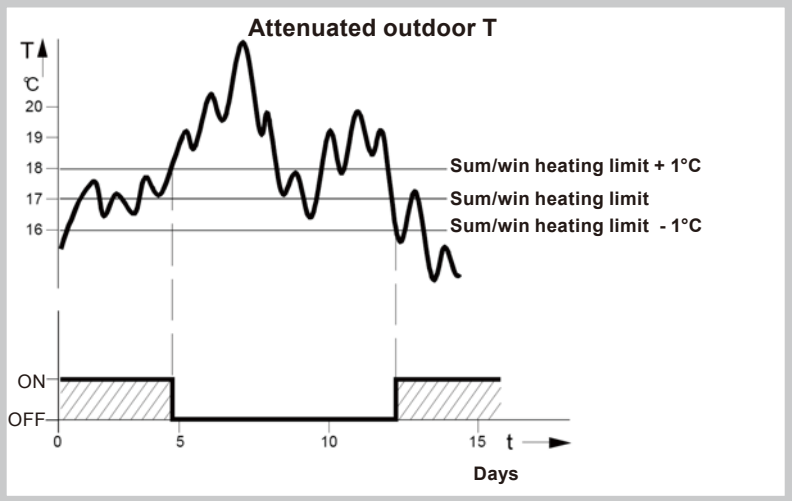

Flow temperature setpoint

LINE		FUNCTION
HC1	HC2	
740	1040	Flow temp setpoint min (for fan convectors)
741	1041	Flow temp setpoint max

This limitation allows to define a range for the flow temperature setpoint. When flow temperature setpoint demanded by the heating circuit reaches the threshold, the setpoint remains permanently at the maximum or minimum, even if the heat demand continues to increase or decrease.

Example (line 741 and 1041):
Floor heating system = 50 °C
Higher temperature radiator = 65 °C

CONTROL SYSTEM

Room Influence

LINE		FUNCTION
HC1	HC2	
750	1050	Room influence

Control types:
When using a room temperature sensor there are 3 different types of control to choose from.

SETTING	CONTROL TYPE
- - - %	Simple control according to outdoor conditions *
1...99 %	Control according to outdoor conditions with room influence *
100 %	Control according to room temperature only

* Requires the connection of an outdoor sensor

Simple control according to outdoor conditions

The flow temperature is computed via the heating curve according to the composite outdoor temperature. This type of control requires proper adjustment of the heating curve, as the control does not take the room temperature into account for this adjustment.

Control according to outdoor conditions with room influence

The difference between the room temperature and the setpoint value is measured and taken into account for temperature control. This enables taking into account possible heat inputs and ensures a more accurate room temperature control. The influence of the difference is defined as a percentage. The better the installation in the reference room (accurate room temperature, correct installation location, etc.) the higher will be the value that can be set.
Example:
Approx 60%: the reference room is appropriate
Approx 20%: the reference room is inappropriate

Information:
Activation of the function requires taking into account the following requirements:
- A room sensor must be connected.
- The "room influence" parameter must be set between 1 and 99.
- The reference room (where the room sensor is installed) must not contain adjusted thermostatic valves. If present in the room, these valves must be fully open.

Control according to room temperature only

The flow temperature is adjusted according to the room temperature setpoint, the current room temperature and its evolution. A slight increase in room temperature, for example, causes an immediate drop in the flow temperature.
Information:
Activation of the function requires taking into account the following requirements:
- A room sensor must be connected.
- The "room influence" parameter must be set to 100%.

The reference room (where the room sensor is installed) must not contain adjusted thermostatic valves. If present in the room, these valves must be fully open.

CONTROL SYSTEM

Quick setback

LINE		FUNCTION
760	1060	Room temp limitation
780	1080	Quick setback

Room temp limitaion

The "Room temperature limitation" function enables the heating circuit pump to be deactivated should the room temperature exceed the current room temperature setpoint by more than the adjusted differential.
The heating circuit pump is activated again as soon as the room temperature falls to a level below the current room temperature setpoint.
During the time the "Room temperature limitation" function is active, no heat request is sent to the producer.

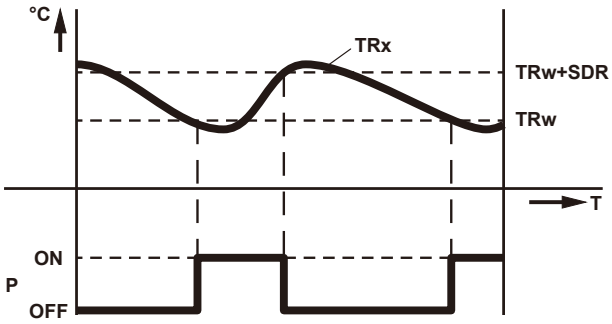

TRx : Actual value of room temperature
TRw : Room temperature setpoint
SDR : Room switching differential
P : Pump
T : Time

Quick setback

During quick setback, the heating circuit pump is deactivated and, in the case of mixing circuits, the mixing valve is fully closed.
When using a room sensor, the function keeps the heating off until the room temperature drops to the level of the "Reduced" or "Frost protection" setpoint.
If the room temperature falls to the reduced or frost level, the heating circuit pump is activated and the mixing valve released.
Quick setback switches the heating off for a certain period of time, depending on the outside temperature
and the building time constant.
Duration of quick setback when "Comfort" setpoint minus "Reduced" setpoint = 2 K (e.g. "Comfort" setpoint = 20 °C and "Reduced" setpoint = 18 °C)

	Building time constant [h]
Composite outside temperature	5
	Duration of quick setback [h]
15°C	7.7
10°C	3.3
5°C	2.1
0°C	1.6
-5°C	1.3
-10°C	1.0
-15°C	0.9
-20°C	0.8

Optimisation at switch-on and switch-off

LINE		FUNCTION
HC1	HC2	
790	1090	Optimum start control max
791	1091	Optimum stop control max

Optimum start control max

The change in temperature levels is optimised in such a way as to reach the comfort setpoint during changeover times.

Optimum stop control max

The change in temperature levels is optimised in such a way as to reach the comfort setpoint -1/4 °C during changeover times.

CONTROL SYSTEM

Reduced Setpoint Increase

LINE		FUNCTION
HC1	HC2	
800	1100	Reduced setpoint increase start
801	1101	Reduced setpoint increase end

This function is used mainly in heating installations that do not have high supplies of power (e.g. low power use homes). When outdoor temperatures are low, adjusting the temperature would take too long. Increasing the reduced setpoint prevents excessive cooling of the rooms in order to shorten the temperature adjustment period when changing over to the comfort setpoint.

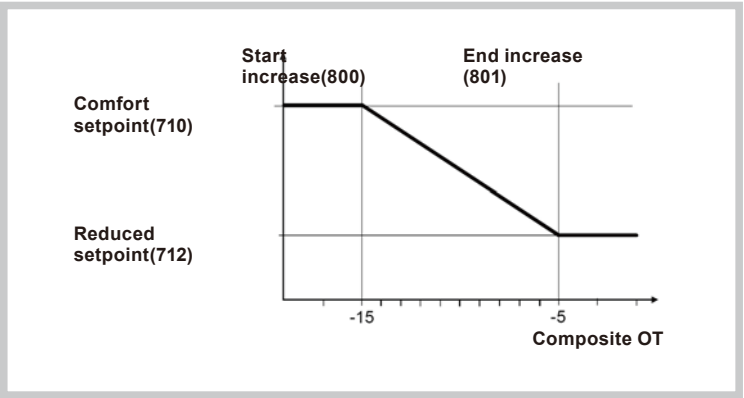

Mixing Valve Control

LINE		FUNCTION
HC1	HC2	
830	1130	Mixer valve boost
834	1134	Actuator running time

Mixer valve boost

The controller adds the increase set here to the current flow setpoint and uses the result as the temperature setpoint for the heat generator.

Actuator running time

For the 3-position servomotor, the travel time can be adjusted. With a 2-position servomotor, the adjusted travel time is inoperative.

Controlled floor drying function

LINE		FUNCTION
HC1	HC2	
850	1150	Floor curing function
851	1151	Floor curing setpoint manually
856	1156	Floor curing day current
857	1157	Floor curing day completed

This function is used in the controlled drying of floors. It adjusts the flow temperature to a temperature profile. Drying is performed by floor heating via the heating circuit with a mixing valve or with a pump.

Floor curing function

- **Off**

The function is deactivated.

- **Heating operational (Fh)**

The first part of the temperature profile is automatically completed.

- **Heating "ready for occupancy" (Bh)**

The second part of the temperature profile is handled automatically.

- **Heating "ready for occupancy" / Heating operational**

The full temperature profile (1st and 2nd part) is performed automatically.

- **Manual**

No temperature profile is performed, but the control is performed according to the "manual controlled drying setpoint". The function is automatically terminated after 25 days

Important:

- The standards and directions of the building contractor must be followed!
- This function will not work properly unless the installation has been adequately made (hydraulics, electricity, settings). Otherwise, the floors to be dried may be damaged!
- The function may be prematurely interrupted by setting it to Off.
- The maximum flow temperature limitation remains active.

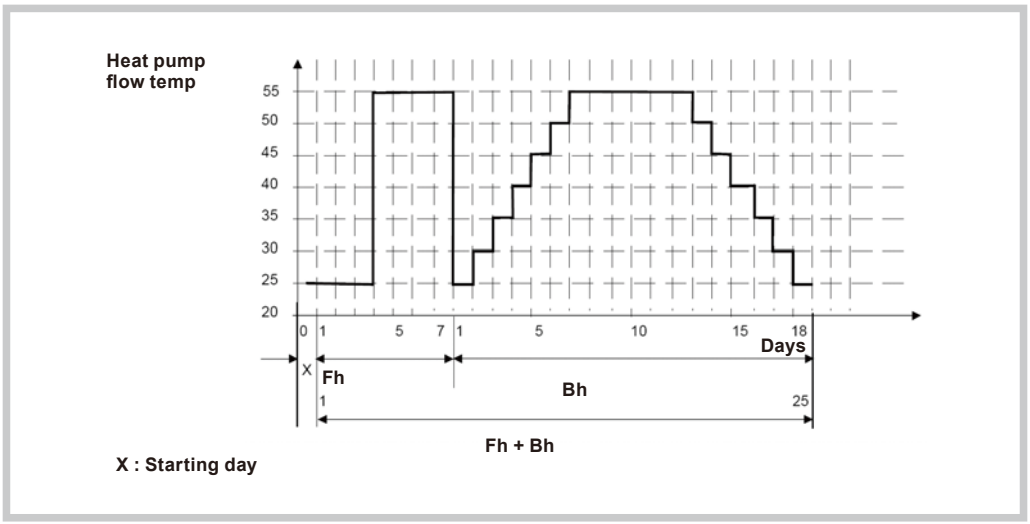

Floor curing setpoint manually

The flow temperature setpoint for the "Manually" controlled floor drying function can be adjusted respectively for each heating circuit.

Floor curing day current

Displays the current flow temperature setpoint for the controlled floor drying function.

Floor curing day completed

Displays the current day of the controlled floor drying function.

Important:

After a power outage, the installation resumes the controlled drying function as it was when the outage occurred.

Operating Mode Changeover

LINE		FUNCTION
HC1	HC2	
900	1200	Operating mode changeover (None / Protection / Reduced / Comfort / Automatic)

In case of an external changeover via input H2 (on the extension module only) the operating mode to which the changeover will be performed must be previously defined.

Heating Circuit Frost Protection

Informations:
The heating circuit frost protection is continuously activated (protection mode ⏻) and is not adjustable.

- Heating circuit frost protection in heating mode:
  If the flow temperature is below 5°C, the controller initiates the production of heat and starts the heating pumps, regardless of the current heating mode.
  If the flow temperature rises again above 7°C, the controller waits another 5 minutes, and then stops the production of heat and the heating pumps.

- Heating circuit frost protection in cooling mode:
  See Cooling mode.

CONTROL SYSTEM

● Cooling circuit 1 functions

The cooling sequence is automatically started when the room temperature is higher than the comfort setpoint in cooling mode (line 902). The cooling function must be activated (line 901 = Auto) and is triggered by the programming clock (line 907). The cooling sequence is interrupted as soon as heating circuit 1 indicates a need for heat or in the presence of a heat demand signal from a DHW circuit or other heating circuit (only if cooling is active).

The controller measures the current room temperature and compares it with the room temperature setpoint to compute the flow temperature setpoint. If the temperature is not low enough the heat pump is started to provide cooling (reversed control of the mixing valve).

The following settings apply to the hydraulic circuit in zone 1 (HC1). If there is a second zone, this zone can be cooled with the setting (line 963) which will connect the pump directly to zone 2. This will require setting the "Mixing valve sub-cooling" parameter (line 938) to a suitable value in order for both zones to be adequately cooled according to the available emitters.

Warning:
Cooling mode is prohibited on all radiators, heating only floors, or any emitters not intended for this purpose.

Operating Mode

LINE	FUNCTION
901	Operating mode (Off / Automatic)

The cooling key on the user interface enables switching between operating modes.

- **Off**

The cooling function is deactivated.

- **Automatic**

The cooling function is automatically activated by the time program (line 907), the holiday program, the occupancy key, or according to the need.

Comfort cooling setpoint

LINE	FUNCTION
902	Comfort cooling setpoint

In cooling mode the room temperature control follows the comfort setpoint adjusted under this setting. The cooling comfort setpoint can be displayed with a knob on the room unit.

In summer the comfort setpoint is gradually increased in relation to the outdoor temperature (see lines 918-920).

Release

LINE	FUNCTION
907	Release (24h/day / Time program HC / Time program 5)

The "Release" setting determines the time program according to which cooling is released.

- **24h/day**

Cooling is continuously activated (24h/Day).

- **Time program HC**

Cooling is activated according to the heating circuit time program.

- **Time program 5**

Cooling is released according to time program 5.

CONTROL SYSTEM

Cooling Characteristic

LINE	FUNCTION
908	Flow temp setpoint at OT 25°C
909	Flow temp setpoint at OT 35°C

The controller computes the flow temperature required for a given composite outdoor temperature based on the cooling characteristic. This is defined by two reference points (flow setpoint at 25°C and at 35°C).

Flow temp setpoint at OT 25°C

This is the cooling flow temperature required when the composite outdoor temperature is 25°C, without summer compensation.

Flow temp setpoint at OT 35°C

This is the cooling flow temperature required when the composite outdoor temperature is 35°C, without summer compensation.

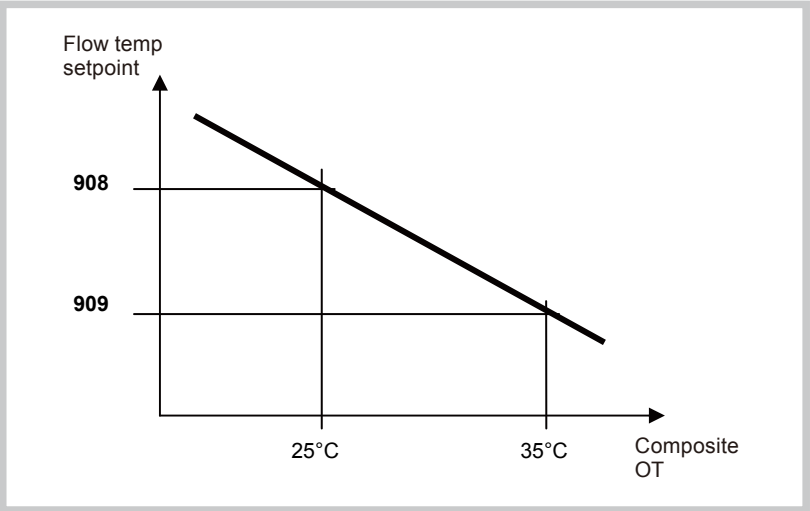

The cooling characteristic is adjusted for a 25°C room temperature setpoint. If the room temperature setpoint is changed the curve will automatically adapt.

Eco

LINE	FUNCTION
912	Cooling limit at OT
913	Lock time at end of heating

CONTROL SYSTEM

Cooling limit at OT

If the composite outdoor temperature is higher than the cooling limit, cooling is released. If the composite outdoor temperature falls at least 0.5°C below the cooling limit, cooling is locked.

Lock time at end of heating

To avoid a quick start of cooling after termination of heating, the cooling function is locked for a time period which can be adjusted with this setting.

The lock time starts when there is no valid heating demand from heating circuit 1. Heating demands from heating circuits 2 or P are ignored.

Information:
Switching off and switching on again the mode selection key causes the lock time to be interrupted.

Summer Compensation

LINE	FUNCTION
918	Summer compensation start at OT
919	Summer compensation end at OT
920	Summer compensation setpoint increase

In summer the "cooling comfort setpoint" (line 902) is gradually increased according to the outdoor temperature. This saves on cooling power and prevents the differences between the ambient temperature of the room and the outdoor temperature being too high.

The resulting "room temperature setpoint" can be viewed in the Info section.

Summer compensation start at OT

Summer compensation starts to be active from the outdoor temperature defined here. If the outdoor temperature continues to rise, the comfort setpoint will be gradually increased.

Summer compensation end at OT

At this outdoor temperature the summer compensation reaches its peak efficiency (line 920). If the outdoor temperature continues to rise, it will no longer influence the comfort setpoint.

Summer compensation setpoint increase

This setting defines the highest value to which the comfort setpoint can be increased.

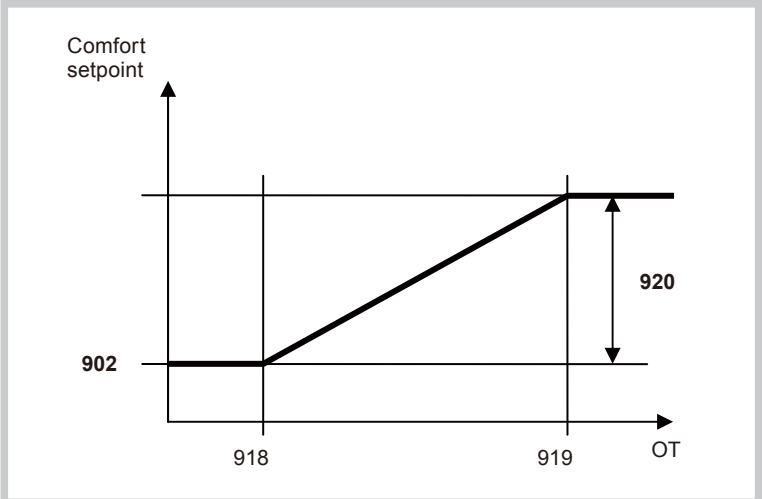

CONTROL SYSTEM

Flow Setpoint Limitation

LINE	FUNCTION
923	Flow temp setpoint min at OT 25°C
924	Flow temp setpoint min at OT 35°C

It is possible to assign a lower limit to the cooling flow temperature.
The limitation line will be defined by two reference points. In addition the resulting flow setpoint will have a lowerlimit and may not be less than 5 °C.

Flow temp setpoint min at OT 25°C

Determines the lowest flow temperature for a composite outdoor temperature of 25°C.

Flow temp setpoint min at OT 35°C

Determines the lowest flow temperature for a composite outdoor temperature of 35°C.

Warning:
If no outdoor temperature is available, the controller will use the "Min. flow setpoint at OT= 35°C" parameter.

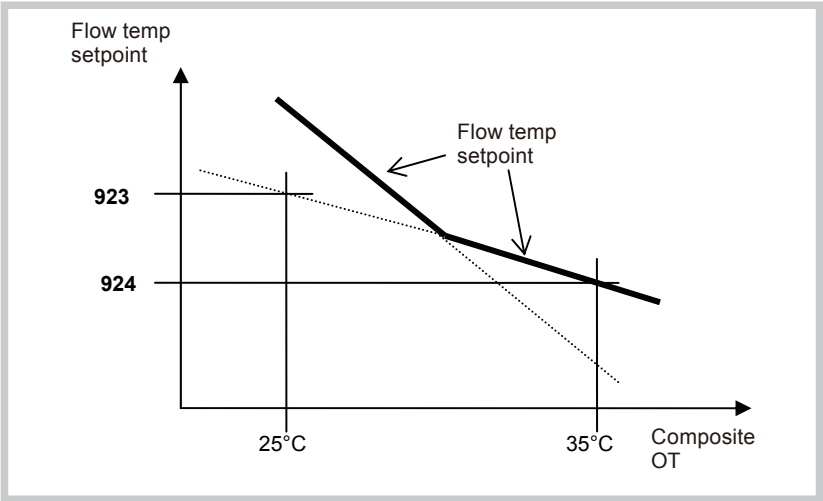

Room Influence

LINE	FUNCTION
928	Room influence

When using a room temperature sensor there are 3 different types of control to choose from.

SETTING	CONTROL TYPE
- - - %	Simple control according to outdoor conditions *
1...99 %	Control according to outdoor conditions with room influence *
100 %	Control according to room temperature only

* Requires the connection of an outdoor sensor

Simple control according to outdoor conditions

The flow temperature is obtained from the composite outdoor temperature on the basis of the cooling characteristic.

This type of control requires the cooling curve to be properly adjusted, as the control does not take the room temperature into account for this adjustment.

Control according to outdoor conditions with room influence

The difference between the room temperature and the setpoint value is measured and taken into account for temperature control. This enables taking into account possible heat inputs and ensures a more accurate room temperature control. Thus the differences with the room temperature are taken into account and the room temperature becomes more stable. The influence of the difference is defined as a percentage.
The better the installation in the reference room (accurate room temperature, correct installation location, etc.) the higher will be the value that can be set.

Example:
- Approx 60%: the reference room is appropriate
- Approx 20%: the reference room is inappropriate

Activation of the function requires taking into account the following requirements:
- A room sensor must imperatively be connected.
- The "room influence" parameter must be set between 1 and 99.
- The reference room (where the room sensor is installed) must not contain adjusted thermostatic valves. Any thermostatic valves present in the rooms must be fully open.

Control according to room temperature only

The flow temperature is adjusted according to the room temperature setpoint, the current room temperature and its evolution. A slight increase in room temperature, for example, causes an immediate drop in the flow temperature.

Activation of the function requires taking into account the following requirements:
- A room sensor must imperatively be connected.
- The "room influence" parameter must be set to 100%.
- The reference room (where the room sensor is installed) must not contain adjusted thermostatic valves. Any thermostatic valves present in the rooms must be fully open.

CONTROL SYSTEM

Room Temperature Limitation

LINE	FUNCTION
932	Room temp limitation

The "room temperature limitation" function enables shutting off the cooling circuit pump if the room temperature falls below the adjusted room temperature setpoint (with summer compensation line 920) by more than the adjusted differential.

The cooling circuit pump is reinitiated as soon as the room temperature rises again above the current room temperature setpoint.

If the room temperature limitation function is active, no cooling demand will be transmitted to production.

The function is deactivated if:
- no room temperature sensor is available
- "Room influence limit." = ---
- "Room influence" (line 928) = --- (simple control according to outdoor conditions)

Mixing Valve Control

LINE	FUNCTION
938	Mixing valve decrease
941	Actuator running time
945	Mixing valve heating mode

Mixing valve decrease

The cooling demand issued by cooling circuit 1 to production is reduced by the adjusted value.

If there is a second zone, this reduction should enable the second zone to be cooled. To achieve this result, the sub-cooling must be determined in accordance with the type of emitter and "With primary controller/system pump" (line 963) must be set to "yes" to switch on the pump for the second zone.

Example:

	Configuration	How the configuration affects control
Zone 1: Heating/ cooling floor **Zone 2:** Fan coils	938 = 10°C, with 924 = 18°C 963 = yes	with a 35°C outdoor temperature the flow setpoint will be 18°C – 10°C i.e. 8°C while in the first zone (HCF) it will be 18°C through action of the mixing valve
Zone 1: Heating/ cooling floor **Zone 2:** HCF	938 = 0°C, with 924 = 18°C 963 = yes	with a 35°C outdoor temperature the flow setpoint will be 18°C in both zones

Warning:
If these settings are not chosen properly the heat pump may stop automatically due to the flow temperature being too low. A safety mechanism is triggered at 6°C to protect the exchanger from freezing.

Actuator running time

For the 3-position servomotor used, it is possible to adjust the travel time. With a 2-position servomotor, the adjusted travel time is inoperative.

Mixing valve heating mode

Determines the position of mixing valve 1 during heating operation is activated.
This parameter is inoperative in installations where heating and cooling circuits are hydraulically separate.

- **Control**

The valve controls in heating and cooling mode.

- **Open**

The valve controls in cooling mode, and is open in heating mode.

With primary controller/system pump

LINE	FUNCTION
963	With primary controller/system pump (No / Yes)

This setting specifies whether the cooling circuit is supplied from the primary controller or from the primary pump (depending on the installation). It can also be used to provide cooling to the second zone.

Warning:
In the case of a radiator or any other emitter which does not support the cooling mode in zone 2, this setting must remain on "No".

CONTROL SYSTEM

● Domestic hot water functions

The control sets the DHW temperature, according to the time program or continuously, to the desired setpoint. The priority of DHW charging over room heating is adjustable in this case

The controller has a configurable legionella function designed for protection against legionella in the storage tank and the pipes. The circulation pump is controlled according to the current time program and operating mode.

Setpoint value

LINE	FUNCTION
1610	Nominal setpoint
1612	Reduced setpoint

The DHW is heated to various setpoint values. These setpoints are active according to the selected operating mode and allow the desired temperatures to be reached in the DHW storage tank.

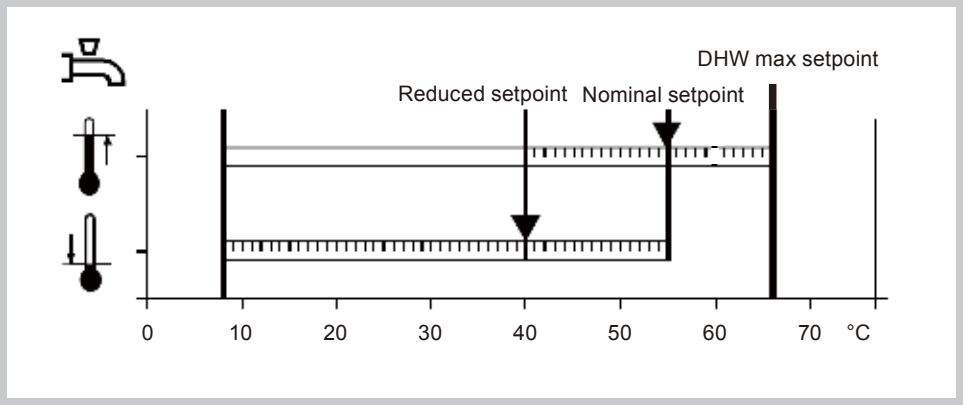

Important:
For optimal operation we recommend reducing the setpoints to the lowest value.
Setpoints which are too high may interfere with heating and cause some discomfort. In this case DHW/Heating changeover cycles may successively occur

If DHW charge boosting is not desired during the day, we recommend adjusting the reduced temperature setpoint to 15°C. Full charging will occur during the night at the nominal temperature..

CONTROL SYSTEM

Release

LINE	FUNCTION
1620	Release of DHW load (24h/day / Heating circ time pgm / Time program 4/DHW / Low-tariff/ Time pgm 4/DHW or Low-tariff)

24h/day

(Not recommended)
Regardless of the time programs, the temperature of the domestic hot water is continuously maintained at the DHW nominal setpoint temperature.
Example:

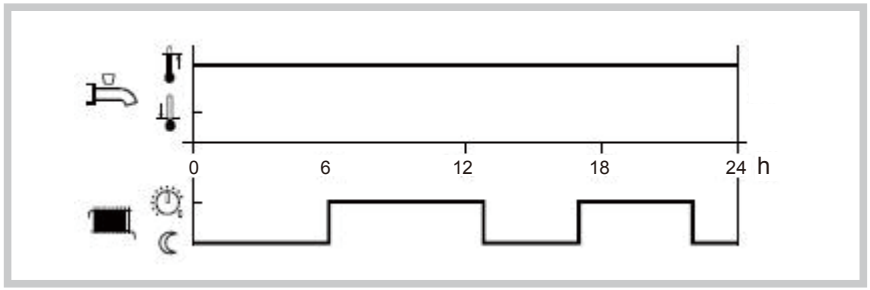

Heating circuit time programs

(Not recommended)
Depending on the heating circuit time programs, the DHW setpoint is changed between the DHW temperature nominal setpoint and the DHW temperature reduced setpoint. The first switch-on point of each phase is advanced by one hour each time.
Example:

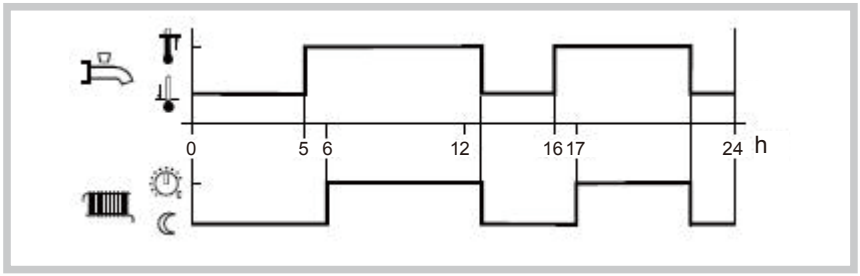

Time program 4 / DHW

(Recommended)
Time program 4 of the local controller is taken into account for the DHW mode. The changeover between DHW nominal setpoint and DHW reduced setpoint occurs on the changeover times of this program. Thus, domestic hot water charging takes place independently from the heating circuits.

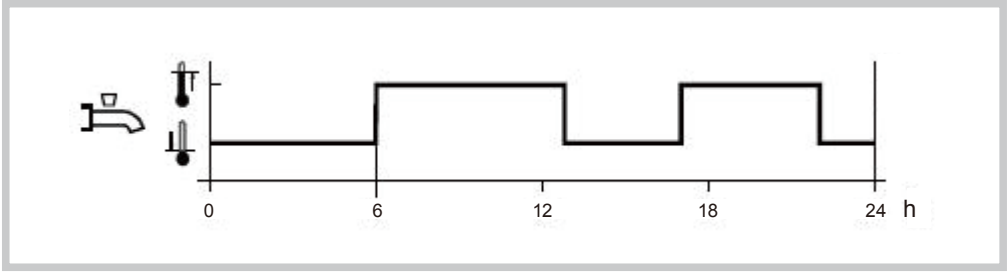

Low-tariff

Released when the low tariff input is active (Input EX2)

Time program 4/DHW or low-tariff

Released when DHW program is set to "Nominal" or if the low tariff input is active.

CONTROL SYSTEM

DHW mode	Holiday status	Release (line 1620)	Time program status (Program 4)	Low-tariff status (EX2)	DHW mode level
Off	x	x	x	x	Frost protection
On	Yes	x	x	x	Frost protection
On	No	…	…	x	…
On	No	Low-tariff (OPK)	x	Inactive	Reduced
On	No	Low-tariff (OPK)	x	Active	Nominal
On	No	Time program 4 or OPK	Nominal	Inactive	Nominal
On	No	Time program 4 or OPK	Reduced	Inactive	Reduced
On	No	Time program 4 or OPK	Nominal	Active	Nominal
On	No	Time program 4 or OPK	Reduced	Active	Nominal

x = N/A

Information:
Release by low tariff input always triggers forced DHW charging.

If the low tariff input EX2 has not been configured and release via OPK has nevertheless been set, the DHW level will either continuously remain on reduced or will follow time program 4.

Legionella Function

LINE	FUNCTION
1640	Legionella function
1641	Legionella function periodically
1642	Legionella function weekday

CONTROL SYSTEM

Legionella function

- **periodically**

The legionella function occurs repeatedly according to the adjusted periodicity (line 1641).

- **Fixed weekday**

The legionella function can be activated on a fixed day of the week (line 1642). With this setting, heating up to the legionella setpoint occurs on the scheduled day of the week, regardless of the storage tank temperatures during the previous period.

● Swimming pool functions

LINE	FUNCTION
2056	Setpoint source heating

The controller enables a swimming pool to be heated by the heat pump. An individual setpoint can be set by means of line 2056, which appears when the swimming pool function is activated by parameter 6046 being set to "Release swimming pool".

Use of input H33 (X152) requires an extension module to be connected to the control.

CONTROL SYSTEM

● Heat pump functions

LINE	FUNCTION
2803	Overrun time cond pump
2843	Compressor off time min
2844	Switch-off temp max
2862	Locking time stage 2
2873	Compressor mod run time
2882	Release integral electric flow
2884	Release electric flow below OT
2886	Compensation heat deficit
2916	Max setpoint HP DHW charg
2920	With electrical utility lock

Overrun time cond pump

When the compressor is switched off, the condenser pump continues to run for the set overrun time.

Compressor off time min

For the same reason, the compressor remains switched off for the minimum period of time set here. Switch-off temperature maximum if the flow or the return temperature exceeds the maximum switch-off temperature, the compressor will be switched off.The heat pump is switched on again when the temperature at both sensors has dropped by the "Switching diff return temp" below the maximum switch-off temperature and the minimum off time has elapsed.

Switch-off temp max

If the flow or the return temperature exceeds the maximum switch off temperature, the compressor will be switched off.

Example (line 2844):
Floor heating system = 55 °C
Higher temperature radiator = 65 °C

Locking time stage 2

When compressor is restarted, the time which keeps minimum capacity can be adjusted. Efficiency becomes better; however, the time of rising capacity becomes long.

Compressor mod run time

Compressor mod run time means the time of compressor frequency indication changed from minimum to maximum.
If this setting value changes to small, compressor frequency changes more quickly.

Warning:
This setting value is too small, the efficiency is decreased due to the compressor frequency changes frequently.

Release integral electric flow

After the release of the 1st stage (heater 1: on, heater 2: off), the controller compares the temperature measured with the point of engagement and forms an integral and includes a possible deficit of heat. Once the value of the integral reaches the maximum value (line 2882), the 2nd stage is engaged (heater 1: off, heater 2: control). The controller continuously compares the temperature measured at the point of engagement and new features to the deficit of heat in the full release. When the full release reaches the value set (line 2882), the 3rd stage of the heater is triggered (heater 1: on, heater 2: Control).

Release electric flow below OT

The heater will be activated only if the attenuated outdoor temperature is below the temperature set here.

Warning:
This setting is too low, there may be a feeling of discomfort due to the fact that the heat pump is unable to meet the heating requirements alone at low outdoor temperatures, and heaters are not switched on.

CONTROL SYSTEM

Compensation heat deficit

This function compensates for excess heat and heatdeficits. These can occur in the following situations:
- Minimum compressor on and off times
- In the case of low temperature requests, the flow temperature can lie below the required setpoint, but the return temperature may not drop below the switch-on point for a longer period of time. In this situation, the heat pump must be switched on to prevent heat deficits

The controller compares continuously the flow temperature setpoint with the actual value and integrates the surplus heat and heat deficits.
Differences are compensated for by extending the compressor on and off times.
If the compressor is not switched on or off due to surplus heat/heat deficits, the controller displays an appropriate status message.
This function is not active during the time the DHW storage tank is charged.
The function is not active either in the case of plants with buffer/(combi) storage tanks.
"Compensation heat deficit" only acts in heating mode. The parameter is inactive in cooling mode.
The maximum switch-off temperature is given priority over the "Compensation" function.
In the case of sudden setpoint changes, both integrals are cleared.

• Behavior in connection with the "Floor curing" function

When activating the "Floor curing" function, the integral is set to a level representing 1.5 times the predefined value (factory setting). If the current temperature lies at least 2 K below the required setpoint, the heat pump is immediately switched on.
If compensation of surplus heat/heat deficits shall act "Only with floor curing fct", the respective setting must be selected. This means that the parameter is deactivated in normal heating mode.

• Calculation of integral

- If a flow temperature sensor (Bx1) is connected and the heating curve is set to the flow temperature setpoint, the controller uses the flow temperature and the flow temperature setpoint for computing the integrals.

In the following situations, the integral is set to "0":
- No valid temperature request delivered
- Setpoint change >2 K
- Frost protection for the heat pump is active
- The heat pump has gone to lockout or cannot deliver any heat for a longer period of time
- The heat pump is in active cooling mode
- A buffer storage tank is being charged
- The function is deactivated

With active DHW charging, the integral value is frozen.

With electrical utility lock

This setting relates to input EX1 (load-shedding or peak day clearing) and allows the electric heaters to be locked as follows:

• Locked

The heat pump and all electric heaters are locked, both heat pump stages and the DHW tank electric heater.
Only the boiler backup, if installed, continues to operate.

• Released

The heat pump operates and all electric heaters are locked, both heat pump stages and the DHW tank electric heater.
The boiler backup, if installed, continues to operate.

CONTROL SYSTEM

● Supplementary source

A supplementary producer can be operated in addition to the main producer (heat pump). Release of the supplementary producer depends on a number of parameters a detailed description of which is given on the following pages.

- Release is effected via release relay Qx2
- 2-position control is effected via control relay QX3
- Ux can be used to transmit the supplementary source a DC 0...10 V signal for the required temperature/output setpoint.

LINE	FUNCTION
3700	Release below outside temp
3701	Release above outside temp

Operation of the supplementary source is released only when the composite outside temperature lies above or below the set temperature limit.
This enables the supplementary source to lock in a selected outside temperature range to ensure bivalent operation of supplementary source and heat pump.

To ensure continuous release of the supplementary source, setting "---" must be selected on the respective operating lines.
If both release values are enabled, the outside temperature must satisfy both criteria, thus ensuring release of the supplementary source.

Overtemperature protection

LINE	FUNCTION
3705	Overrun time

Overrun time of release for the external source: If the integral indicates another heat deficit before the overrun time has elapsed, the release remains activated.

If the set overrun time elapses before the common flow temperature drops below the common flow temperature setpoint, the release is deactivated also.

CONTROL SYSTEM

Flow control

LINE	FUNCTION
3720	Switching integral
3723	Locking time

Switching integral

The temperature-time integral is a continuous summation of the temperature differential over time. In this case, the decisive criterion is the difference by which the temperature lies above or below the common flow temperature setpoint.
The temperature-time integral gives consideration not only to the period of time, but also to the extent of over-/undershoot. This means that when the crossing is significant, the supplementary source is released earlier, or locked earlier, than with minor crossings.

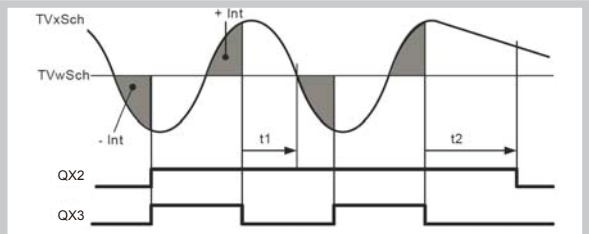

TVx	Actual value of flow temperature
TVw	Flow temperature setpoint
+ Int	Surplus integral
- Int	Deficit integral
t1	Overrun time (not completed)
t2	Overrun time (fully completed)
QX2	Release output QX2
QX3	Control QX3

Locking time

The locking time enables the heat pump to reach a stable operating state before the supplementary source is allowed to switch on.
The supplementary source is released only when the locking time has elapsed.
The locking time starts as soon as a valid flow temperature setpoint is available.
Calculation of the release integral starts only when the locking time has elapsed.

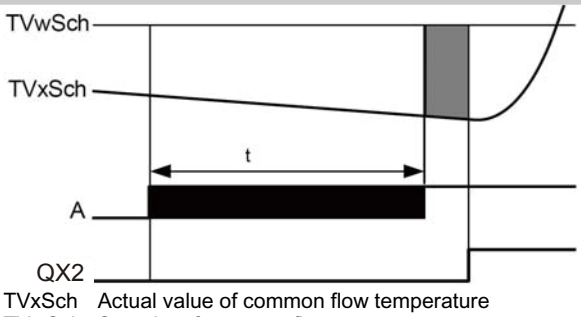

TVxSch	Actual value of common flow temperature
TVwSch	Setpoint of common flow temperature
A	Request
QX2	Release output QX2
T	Locking time

No consideration is given to the locking time, if the heat pump malfunctions or is locked, or if the supplementary source must end DHW charging.

Setting "- - -" can be used to deactivate the function.

CONTROL SYSTEM

● DHW storage tank functions

DHW charging at the nominal setpoint temperature (line 1610) always takes place in two stages. In the first stage, only the heating pump heats the DHW tank.
The power supplied during this time is at its peak. Then, when the heat pump is no longer able to supply enough heat to reach the setpoint value, it switches on the DHW tank heater if authorised. The heater will be cut off when charging is complete. While the DHW tank charging process via the electric heater is finishing, the heat pump resumes heating.

Charging Control

LINE	FUNCTION
5024	Switching differential
5030	Charging time limitation

Switching differential

If the DHW temperature is lower than the current setpoint minus the differential set here, the DHW charging process is launched.
It ends when the temperature reaches the current setpoint.

Information:
Forced charging is triggered on the first DHW release of the day.
Charging is also launched when the DHW temperature is within the differential, and as long as it is not less than 1K above the setpoint.

Charging time limitation

During charging, the room heating may be stopped or insufficient.
Therefore it is often advisable to limit the charging process timewise to enable heating.

If "- - -" has been selected the charging time limitation will be deactivated. The DHW will be heated to the nominal setpoint, even if the room heating has not received enough power in the meantime.

If a value between 10 and 600 is selected, charging will be suspended after the time period set in minutes, and will remain suspended over that time before resuming. The generator power remains available in the meantime to heat the room. This cycle is repeated until the DHW nominal setpoint has been reached.

Information:
When the room heating is stopped (summer mode, economy function, etc.), DHW charging remains active, regardless of the setting.

Recooling

LINE	FUNCTION
5055	Recooling temp
5057	Recooling collector

Recooling temp

An activated recooling function remains in operation until the set recooling temperature in the DHW storage tank is reached.

Recooling collector

When the collector is cold, surplus energy can be emitted to the environment via the collector's surfaces.

CONTROL SYSTEM

Heater

LINE	FUNCTION
5061	Electric immersion heater release

Electric immersion heater release

- **24h/day**

The heater is continuously active regardless of time programs.

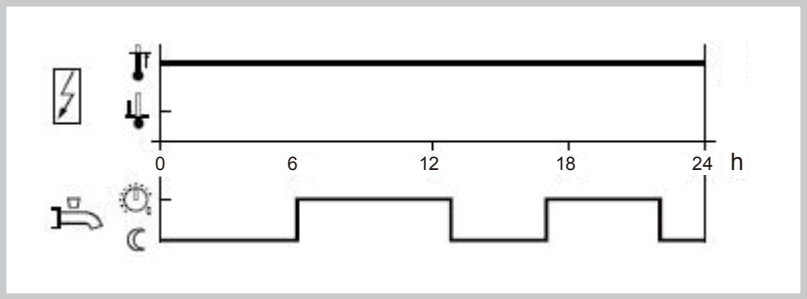

- **DHW release**

The heater is controlled according to "DHW release".

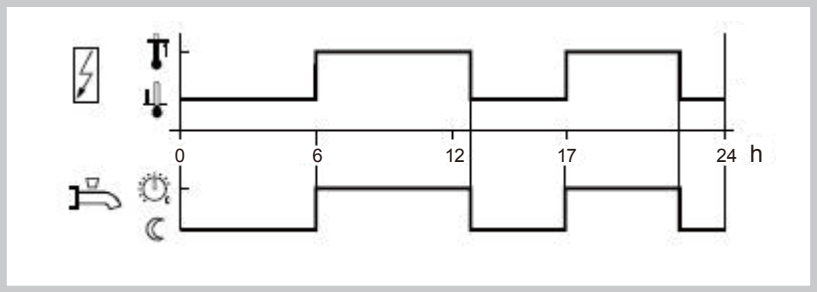

- **Time program 4/DHW**

Time program 4/DHW of the local controller is taken into account for the heater.

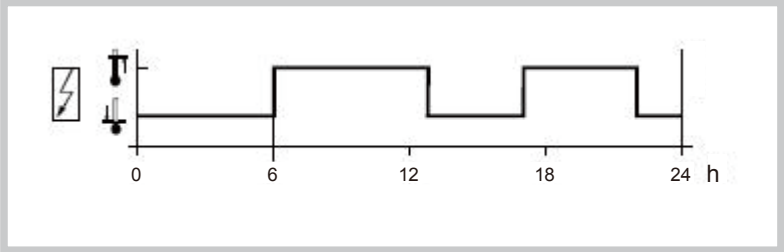

Information:
Switch-on will actually be in effect only if the heater is able to operate according to the "heater operating mode" setting.

CONTROL SYSTEM

● Configuration functions

When an installation is started up, the Indoor unit diagram presetting for that installation must be entered.

Pre-settings

LINE	FUNCTION
5700	Pre-setting

Only Pre-setting 1 to 4 are used among 9 availables.

Heating circuits/Cooling Circuit

LINE	FUNCTION
5710	Heating circuit 1
5711	Cooling circuit 1 (Off / 4-pipe system / 2-pipe system)
5715	Heating circuit 2

Heating circuit 1

Using this setting, heating circuit 1 can be switched on and off.

Cooling circuit 1

- **Off**

The cooling circuit is deactivated.

- **4-pipe system**

Not compatible with the this system.
This setting relates to passive cooling.

- **2-pipe system**

Activates the heat pump cooling mode. However, the cooling kit must have been previously connected.

Warning:
If the cooling kit has not been connected and the cooling mode is activated the heat pump will behave abnormally and might cause some unwanted discomfort.
Information:
Switching on the cooling mode causes the menu '"Cooling circuit 1" to appear.'"Cooling circuit 1" to appear.

Heating circuit 2

Using this setting, heating circuit 2 can be switched on and off.

DHW

LINE	FUNCTION
5731	DHW controlling element Q3

No charging request
No DHW charging via Q3.
Charging pump
DHW charging is effected with a pump connected to terminal Q3.

Diverting valve
DHW charging is effected with a diverting valve connected to terminal Q3.

Electric immersion heater

LINE	FUNCTION
5806	Type electric immersion heater fiow

Within the type of electric backup, 4 settings are possible :
3-stage
Not used
2-stage excuding
Not used

2-stage complementary
The backup 1 starts alone, then the backup 2 starts alone, then the two backups start simultaneously.
Exemple for a 3kw backup and a 6kw backup, 1st stage : 3kw, 2nd stage : 6kw, 3rd stage : 3+6=9kw.
Modulating Ux
The backup 1 is regulated as required.

CONTROL SYSTEM

Basic unit EX/E

LINE	FUNCTION
5981 5983 5985	Contact type input EX1, EX2, EX3

The type of contact can be selected:
NC
The input's function is active when voltage is not present.
NO
The input's function is active when voltage is present.

The descriptions relating to the functions of the EX contact apply when an NO contact is selected.

Sensor Corrections

LINE	FUNCTION
6098	Not used
6100	Readjustment outside sensor

- The outdoor temperature measuring value can be corrected within a range of +/- 3 K.

Installation Frost Protection

LINE	FUNCTION
6120	Frost protection for the plant

According to the outdoor temperature, the heating circuit pump and the condenser pump are switched on although there is no demand for heat.

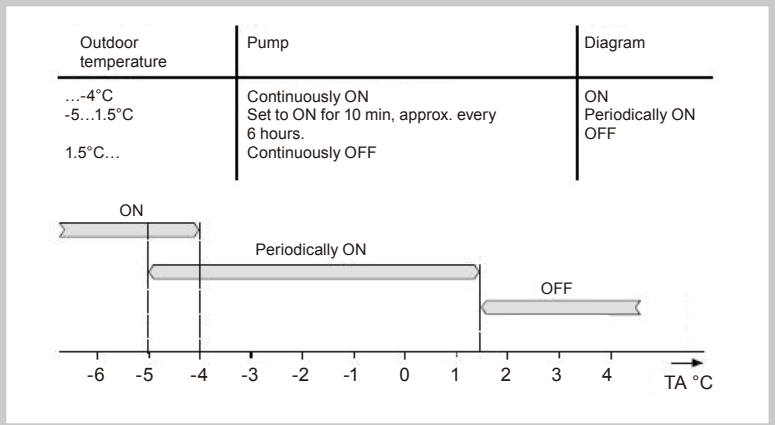

Miscellaneous

LINE	FUNCTION
6205	Reset to default parameters
6220	Software version

CONTROL SYSTEM

Reset to default parameters

All parameters can be reset to factory settings, except followings: Time and date, User interface, and all time programs, as well as the operating hours and the various counters.

Software version

The software version represents the controller software status at the time the unit is being produced. It is printed on the back of the unit. The first two digits represent the software version, and the third is the revision number (e.g. 01.0)

● Error functions

When a fault occurs, the symbol 🔔 appears and it is possible to display an error message in the Info section by pressing the Info key. The display shows what caused the fault.

Reset (unlock) Heat Pump

LINE	FUNCTION
6711	Reset HP

This line is used to clear the heat pump error messages. The predetermined switch-on delay in case of a failure is therefore ignored, which avoids waiting periods during servicing / troubleshooting.

This option should not be used in normal operating conditions.

Error History

LINE	FUNCTION
6800 to 6818	Time stamp and history of faults 1 -10

The controller saves the last 10 faults which have occurred to a non volatile memory. Any new entry will delete the oldest entry from the memory.
A fault code and a time are saved for each fault.

Error Code List:

- Designation of error:
  The error designations in the table below are displayed in plain text on the user interface.
- Location:
  The sensor or contact associated to the error message.
- Reset:
  Reset is either automatic or manual, depending on the type of error (see table below with error messages).
  - Manual reset:
    Errors which are displayed in the Info section and accompanied by the "Reset " question can be manually reset. Press the "OK" key once, "yes" flashes on the display. Press the "OK" key again to confirm the "yes" and the error will be reset.
  - Automatic reset:
    Automatic clearing occurs after a previously set time (OEM setting) has elapsed. After this time out (6 hours by default) has elapsed, the controller will attempt to reset the error.
    If "Number" appears in the table, it is possible to define how many times the fault can be reset before the heat pump is declared out of order.
- Heat pump operation:
  Shows whether or not the heat pump can continue to operate when the error occurs.
  - Yes:
    The heat pump continues to operate despite the error message.
  - No:
    The error interrupts operation of the heat pump.
  - No with glycol water:
    This error stops glycol water heat pumps, but does not prevent operation of water or air heat pumps.
  - No with water:
    This error stops water heat pumps, but does not prevent operation of glycol water heat pumps.
  - No with air:
    This error stops air heat pumps, but does not prevent operation of water heat pumps or glycol water heat pumps.
  - Per diagram:
    The heat pump will be stopped according to the current installation diagram.
- Priority:
  Errors are ranked by priority. From priority 5 onward (i.e. priority levels 5 - 9) the alarm messages used in remote control are sent.
  In addition, the alarm relay is switched on.

CONTROL SYSTEM

Table of error messages which can be displayed:

No. Designation of error	Location	Reset		HP operation	Priority
		Manual	Automatic		
0: No fault					
10: Outdoor sensor	BX4 (X84)	No	No	Yes	6
30: Flow sensor 1	BX1 (X80)	No	No	Yes	6
31: Cooling flow sensor 1	BX1 (X80)	No	No	Yes	6
32: Flow sensor 2	BX31 (X153)	No	No	Yes	6
33: Heat pump flow temp sensor error	BX1 (X80)	No	No	Yes	6
44: Heat pump return temp sensor error	BX2 (X80)	No	No	Per diagram	6
50: DHW temp sensor 1	BX3 (X84)	No	No	Yes	6
60: Room sensor 1		No	No	Yes	6
65: Room sensor 2		No	No	Yes	6
76: Special sensor 1	BX	No	No	Yes	3
83: BSB wire short-circuit		No	No	Yes	8
84: BSB, address collision		No	No	Yes	3
85: Radio communication error		No	No	Yes	8
98: Extension module 1		No	No	Yes	8
99: Extension module 2		No	No	Yes	8
100: 2 master clocks on bus		No	No	Yes	3
102: Clock without running supply		No	No	Yes	3
105: Maintenance message		No	No	Yes	5
121: HC1 flow temp too low		No	No	Yes	6
122: HC2 flow temp too low		No	No	Yes	6
126: DHW charge monitoring		No	No	Yes	6
127: Anti-legionella temperature		No	No	Yes	6
134: Heat pump alarm summary	E20	Yes	Number*	No	9
138: No heat pump control sensor		No	Yes	No	1
146: Sensor / Control device configuration		No	No	Yes	3
171: Alarm contact 1 activated	H1/H31	No	No	Yes	6
172: Alarm contact 2 activated	H21/H22/ H32	No	No	Yes	6
174: Alarm contact 4 active H3		No	No	Yes	
178: HC1 safety thermostat		No	No	Yes	3
179: HC2 safety thermostat		No	No	Yes	3
201: Frost alarm	BX1 (X80)	Yes	No	No	9
243: Swimming pool sensor	BX34 (X154)	No	No	Yes	6
325: BX/Ext unit: same sensors		No	No	Yes	3
327: Ext modules: same functions		No	No	Yes	3
329: Ext modules/Mixing grp: same functions		No	No	Yes	3
330: BX1 no function		No	No	Yes	3
331: BX2 no function		No	No	Yes	3
332: BX3 no function		No	No	Yes	3
333: BX4 no function		No	No	Yes	3
334: BX5 no function		No	No	Yes	3
335: BX21 no function		No	No	Yes	3
336: BX22 no function		No	No	Yes	3
357: cooling circuit flow temp not reached		No	No	Yes	6

CONTROL SYSTEM

No. Designation of error	Location	Reset		HP operation	Priority
		Manual	Automatic		
359: no cooling valve Y21		No	No	Yes	3
360: no process reversing valve Y22		No	No	Yes	3
364: Heat pump cooling system error		No	No	Yes	3
369: External fault				No	
370: Outdoor unit fault				No	

*: If such statuses or events occur for the first time, they will not directly generate a fault message, but only a status message.

Only if the anomaly occurs repeatedly over a predefined time period and at a given frequency (number) will an error message be generated.

CONTROL SYSTEM

● Service / special operation functions

Maintenance

Maintenance functions can be used as a preventive step for periodically monitoring the installation. All maintenance functions can be individually activated / deactivated.

The controller automatically generates maintenance messages if the settings defined are either exceeded or fail to be reached.

LINE	FUNCTION
7070	HP interval
7071	HP time since maintenance
7073	Cur starts compressor 1/hrs run

HP interval

Defines the maintenance frequency (in months) for the heat pump.

HP time since maintenance

Displays the time (in months) elapsed since the last maintenance. If the value exceeds the "heat pump interval" (line 7070), the symbol will be displayed and a maintenance message will appear in the Info section:
17: Heat pump maintenance Interval (Priority 6)

This setting can be reset with the associated rights of access.

Cur starts compressor 1/hrs run

The average number of compressor startups per hour of operation, obtained over a period of 6 weeks.
If the value exceeds the "Comp1 max startups/hr op" adjusted setting, the symbol will be displayed and a maintenance message will appear in the Info section:
8: Too many compressor 1 startups (Priority 9)

This setting can be reset with the associated rights of access.

Emergency mode

If the heat pump is not operating properly, an emergency operation can be maintained. The emergency operation enables the installation to be run with the available heaters (flow, DHW tank). In this case the compressor will remain off.

LINE	FUNCTION
7141	Emergency operation
7142	Emergency operation function type

Emergency operation

Emergency operation can be activated and deactivated manually.

- **Off**

Emergency operation is deactivated.

- **On**

Emergency operation is activated.

Emergency operation function type

- **Manually**

Emergency operation can be activated/deactivated only through the Emergency operation setting on line 7141.

- **Automatically**

As soon as a fault occurs on the heat pump, emergency operation is automatically switched on. It stops when the fault is removed and, if necessary, cleared (reset). Emergency operation may however be activated / deactivated manually via the "Emergency operation" setting on line 7141.

CONTROL SYSTEM

Simulation

LINE	FUNCTION
7150	Simulation outside temp

Simulation outside temp

To make the starting-up and troubleshooting processes easier, it is possible to simulate an outdoor temperature in the range of -50...+50°C. During simulation, the current, composite and attenuated outdoor temperatures are ignored and substituted with the adjusted simulation temperature.

Computation of the three outdoor temperatures based on the actual outdoor temperature continues to be performed during the simulation, and these temperatures are available again when the simulation is over.

This function can be deactivated by selecting -.- on this line or automatically, after a 5 hour waiting period.

CONTROL SYSTEM

● Input / output test functions

Input/output testing is used to ensure that the connected components are in working order.

Relay Output Testing

Selection of a setting from relay testing closes the corresponding relay and therefore switches on the connected component. This makes it possible to check that the relays are in working order and that the wiring has been performed correctly.

LINE	FUNCTION
7700	Relay test This consists of instructing the regulator's relays one by one and checking their outputs. This enables you to check that the relays are working and that the cabling is correct. Check that each appliance in the installation is operating correctly. (0) No test (1) Everything is on STOP (2) Relay output QX1 (3) Relay output QX2 (4) Relay output QX3 (5) Relay output QX4 (6) Relay output QX5 (7) Relay output QX6 (8) Relay output QX31 (9) Relay output QX32 (10) Relay output QX33 (11) Relay output QX34 (12) Relay output QX35 (13) Relay output QX36 (14) Relay output QX21 module 1 (15) Relay output QX22 module 1 (16) Relay output QX23 module 1 (17) Relay output QX21 module 2 (18) Relay output QX22 module 2 (19) Relay output QX23 module 2 The display shows the “Key” symbol. Pressing the Info button displays "Error 368". Warning: The component being tested is receiving electr

Warning:

During testing of an output, the heat pump is stopped, all outputs are "off" and only the controlled output is on.

CONTROL SYSTEM

CONTROL SYSTEM

Analog Input/Output Testing

LINE	FUNCTION
7710	Output test UX1
7712	PWM signal UX1
7722	Cooling mode DO2
7723	Heat pump D3
7724	Output test UX3
7725	Voltage value UX3

Cooling mode DO2

Shows the output status.

Output test UX3

Enables testing the outdoor unit control.

Sensor Input Testing

LINE	FUNCTION
7820	Sensor temp BX1
7821	Sensor temp BX2
7822	Sensor temp BX3
7823	Sensor temp BX4

Displays the temperature of each sensor.

Input test EX1-3

LINE	FUNCTION
7911	Input EX1
7912	Input EX2
7913	Input EX3

By selecting a setting from input test EX1-3, the relevant input will be displayed, enabling it to be checked.

Display of 0 V means that there is no voltage and the respective input is currently inactive. Display of 230 V means that voltage is present at the respective input so that it is activated.

Input / output test I/O module

LINE	FUNCTION
7973	Sensor temp BX31
7976	Sensor temp BX34
7996	Contact state H33

The sensor test operate the same as for BX1-4 on the basic unit.

CONTROL SYSTEM

● State functions

The current operating status of the installation can be viewed by means of status displays.

Messages

LINE	FUNCTION
8000	State heating circuit 1
8001	State heating circuit 2
8003	State DHW
8004	State cooling circuit 1
8006	State heat pump
8007	Not used
8010	Not used
8011	State swimming pool
8022	State supplementary source

State heating circuit

End user (Info level)	Commissioning, Engineer
Thermostat response	Thermostat response
Manual action active	Manual action active
Controlled drying active	Controlled drying active
Heating mode restriction	Overeating protection active Restriction, boiler protection Restriction, DHW priority Restriction, storage tank
Forced draft	Forced draft, storage tank Forced draft, DHW Forced draft generator Forced draft Switch-off delay active
Comfort heating mode	Optimis. at switch-on + accelerated heating Optimization at switch-on Accelerated heating Comfort heating mode
Reduced heating mode	Optimization at switch-off Reduced heating mode
Frost protection active	Room frost protection Flow frost protection active Install. frost protection active
Summer mode	Summer mode
Off	Eco day active Reduced decrease Frost protection decrease Room temperature limitation Off

CONTROL SYSTEM

State DHW (8003)

End user (Info level)	Commissioning, Engineer
Thermostat response	Thermostat response
Manual action active	Manual action active
Draw-off mode	Draw-off mode
Adiabatic cooling active	Adiabatic cooling by collector Adiabatic cooling via gen/HC
Charging lock active	Discharge protection active Charging duration limit. active Charging locked
Forced charging active	Forcing, DHW tank max temp Forcing, max charging temp Forcing, anti-legion. setpoint Forcing, comfort setpoint
Charging by heater	Charging by heater, anti-legion. setpoint Charging by heater, comfort setpoint Charging by heater, reduced setpoint Charging by heater, frost protection setpoint Heater released
Accelerated charging active	Flow active Anti-legion. accelerated charging
Charging active	Charging, anti-legion. setpoint Charging, comfort setpoint Charging, reduced setpoint
Frost protection active	Frost protection active
Switch-off delay active	Switch-off delay active
Charging on standby	Charging on standby
Charged	Charged, max tank temp Charged, max charging temp Charged, anti-legionella temp Charged, nominal temp Charged, reduced temp
Off	Off
Ready	Ready

CONTROL SYSTEM

State cooling circuit 1 (8004)

End user (Info level)	Commissioning, Engineer
Dewpoint sensor activated	Dewpoint sensor activated
Manual action active	Manual action active
Fault	Fault
Frost protection active	Flow frost protection active
Cooling mode locked	Locked, heating mode Lock time after heating Locked, generator Locked, storage tank
Cooling mode restricted	Flow temp setpoint increase by hygrostat Dewpoint flow min limit Outdoor temp flow min limit
Comfort cooling mode	Comfort cooling mode Switch-off delay active
Cooling protection mode	Cooling protection mode
Frost protection active	Frost protection active
OT cooling limit activated	OT cooling limit activated
Off	Off Room temperature limitation Flow limit reached
Cooling mode off	Cooling mode deactivated

CONTROL SYSTEM

State heat pump (8006)

End user (Info level)	Commissioning, Engineer
Emergency mode	Emergency mode
Fault	Fault
Locked	Locked, outdoor temperature Locked, external Locked, economy mode
Lim. time active	Consumer flow rate controller Min outdoor temp use limit Max outdoor temp use limit Max switch off temp lim Max OT limit cooling Min switch off temp limit Comp min switch off time active Excess heat compensation
Frost protection active	Heat pump frost protection
Defrosting activated	Defrosting activated
Cooling mode active	Comp min ON time active Comp 1 ON
Heating	Comp min ON time active Heat deficiency compensation Max cond diff limit Min cond diff limit Comp.1 and heater ON Comp 1 ON Heater ON
Frost protection active	Install. frost protection active
Off	Flow active Switch-off delay active No demand

State swimming pool (8011)

End user (Info level)	Commissioning, Engineer
Manual action active	Manual action active
Fault	Fault
Heating mode restriction	Heating mode restriction
Forced draft	Forced draft
Heating	Generator heating mode
Heated, max pool temp Heated	Heated, max pool temp Heated, generator setpoint
 Heating off	Solar heating mode OFF Generator heating mode OFF
Cooling	Cooling

CONTROL SYSTEM

State supplementary source (8022)

End user (Info level)	Commissioning, Engineer
Locked	Locked, solid fuel boiler Locked, outside temperature Locked, economy mode
In operation for HC, DHW	In operation for HC, DHW
Released for HC, DHW	Released for HC, DHW
In operation for DHW	In operation for DHW
Released for DHW	Released for DHW
In operation for heating circuit	In operation for heating circuit
In operation for HC, DHW	In operation for HC, DHW
Released for HC, DHW	Released for HC, DHW
In operation for DHW	In operation for DHW
Released for DHW	Released for DHW
In operation for heating circuit	In operation for heating circuit
Released for HC	Released for HC
Overrun active	Overrun active
Off.	Off.

CONTROL SYSTEM

● Diagnostics heat generation functions

Various setpoints and actual values, relay switch status data can be displayed for purposes of diagnosis.

Heat Pump

LINE	FUNCTION
8402	Electric immersion heater 1 flow
8403	Electric immersion heater 2 flow
8406	Condenser pump

These lines are used to check the operating mode of the components controlled by the heat pump relays. The display "0" means that the associated components are currently disconnected. The display "1" means that the associated components are currently switched on.

Information:
This information applies to relays defined as normally open contacts. For normally closed contacts, the action is reversed.

Setpoints and Measured Values

LINE	FUNCTION
8410	Return temp HP
8412	Flow temp HP
8413	Compressor modulation
8414	Modulation electric flow
8425	Temp differential condenser

These lines allow the various setpoints and measured values for the heat pump to be viewed.

Hour / Startup Counter

LINE	FUNCTION
8454	Locking time HP
8455	Counter number of locks HP
8456	Hours run electric flow
8457	Start counter electric flow

Locking time HP

Displays the cumulative locking time since start-up by the electrical services (via external locking signal).

Counter number of locks HP

Displays the cumulative locks since start-up by the electrical services (via external locking signal).

Hours run electric flow, Start counter electric flow

These lines are used to view the hours of operation and the number of start-up of electric heater.

CONTROL SYSTEM

● Diagnostics consumers functions

Various setpoints and actual values, relay switch status and timing status data can be displayed for purposes of diagnosis.

Outside Temperatures

LINE	FUNCTION
8700	Outside temp
8701	Outside temp min
8702	Outside temp max
8703	Outside temp attenuated
8704	Outside temp composite

The current, minimum, maximum, attenuated and composite outdoor temperatures are displayed.

Heating Circuits

LINE	FUNCTION
8730 and 8760	heating circuit pump 1 and 2
8731	Heating circuit mix valve 1 open
8732	Heating circuit mix valve 1 closed
8740 and 8770	Room temp 1 and 2
8743 and 8773	Flow temp 1 and 2

The display "Off" means that the associated components are currently disconnected.
The display "On" means that the associated components are currently switched on.

Cooling Circuit

LINE	FUNCTION
8756	Flow temp cooling 1

The actual value of the cooling mode are displayed.

CONTROL SYSTEM

Domestic Hot Water

LINE	FUNCTION
8820	DHW pump
8821	DHW electrical resistance
8830	DHW temperature
8840	Hours run DHW pump
8841	Start counter DHW pump
8842	Hours run electric DHW
8843	Start counter electric DHW

The measured values, the DHW circulation pump and charging temperature, operating hour and start-up counters are displayed, as well as temperatures of the primary controllers and DHW heater.

Swimming Pool

LINE	FUNCTION
8900	Swimming pool temp

The current temperature of the swimming pool is displayed.

Line

LINE	FUNCTION
8950	Common flow temp

Multifunction Relay Status

LINE	FUNCTION
9031	Relay output QX1
9032	Relay output QX2
9033	Relay output QX3
9034	Relay output QX4
9035	Relay output QX5

The switching status of multifunction relays 1 - 5 can be viewed individually on these lines. The display "Off" means that the components assigned to this output are currently disconnected. The display "On" means that the associated components are currently switched on.

CONTROL SYSTEM

Status of Relays for Extension Modules 1 and 2

LINE	FUNCTION
9050	Relay output QX21 module 1
9051	Relay output QX22 module 1
9052	Relay output QX23 module 1
9053	Relay output QX21 module 2
9054	Relay output QX22 module 2
9055	Relay output QX23 module 2

The switching status of the relays connected to extension modules 1 and 2 can be viewed on these lines.

The display "Off" means that the components assigned to this output are currently disconnected. The display "On" means that the associated components are currently switched on.

I/O module

LINE	FUNCTION
9071	Relay output QX31
9072	Relay output QX32
9073	Relay output QX33
9074	Relay output QX34
9075	Relay output QX35

The switching states of each relay on the I/O module can be queried via these operating lines.

The display "Off" means that the components assigned to this output are currently disconnected. The display "On" means that the associated components are currently switched on.

CONTROL SYSTEM

3. ELECTRICAL CONNECTIONS

3-1. OVERVIEW OF ALL THE ELECTRICAL CONNECTIONS

The wiring diagram for the indoor unit is shown in detail on electrical wiring diagrams (Chapter 1 for outdoor unit and Chapter 2 for indoor unit).

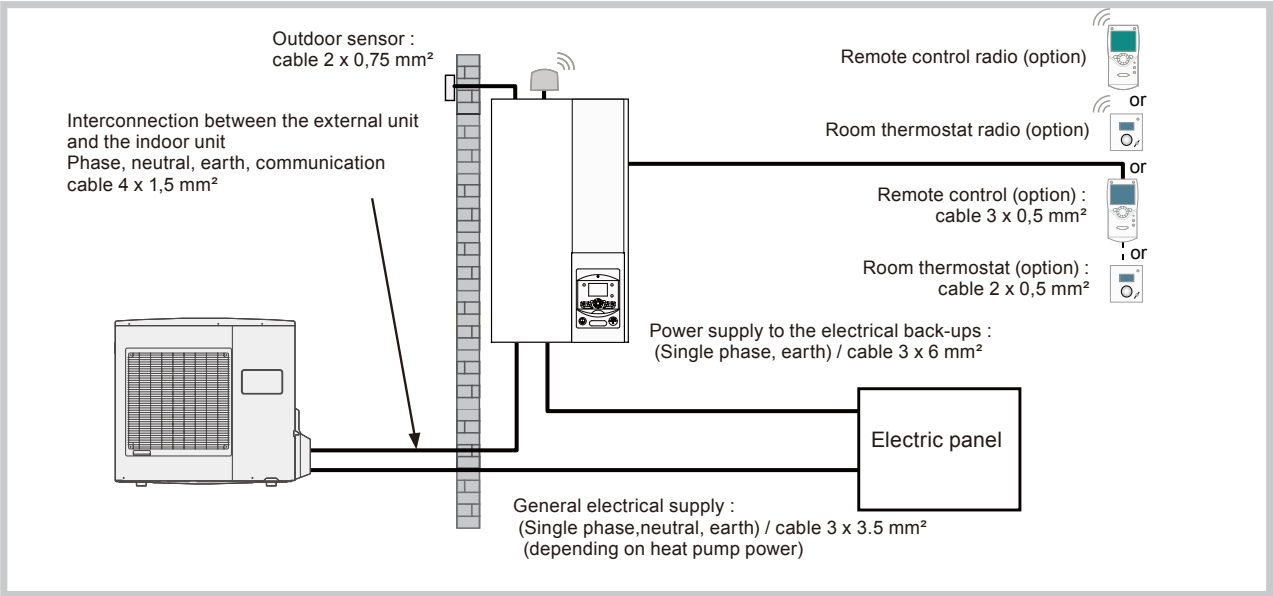

Overall layout of the electrical connections for a simple installation (1 heating circuit)

CONTROL SYSTEM

3-2. ELECTRICAL CONNECTIONS ON THE HYDRAULIC UNIT

- **Remove the front panel (2 screws A)**

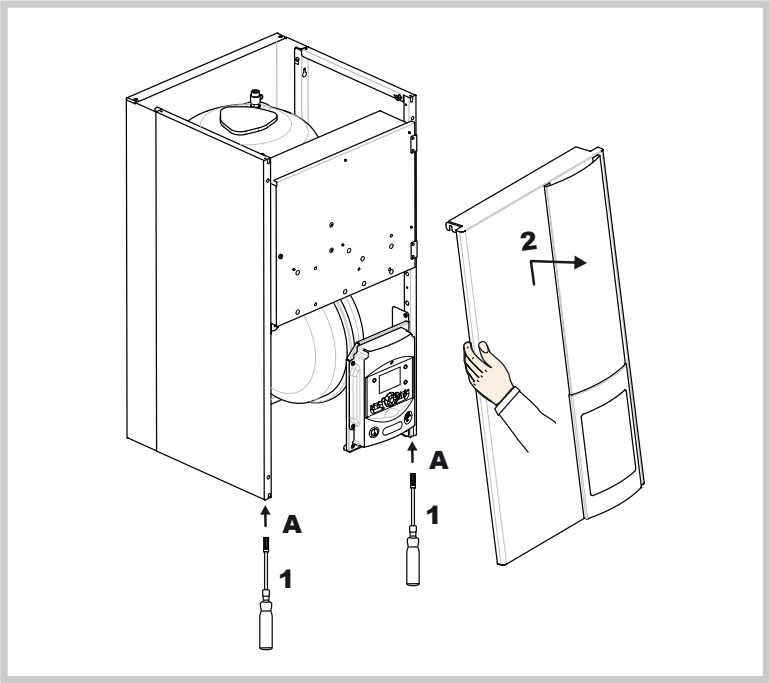

Removing the front panel

- **Remove the cover of the electric box (1 screw B)**

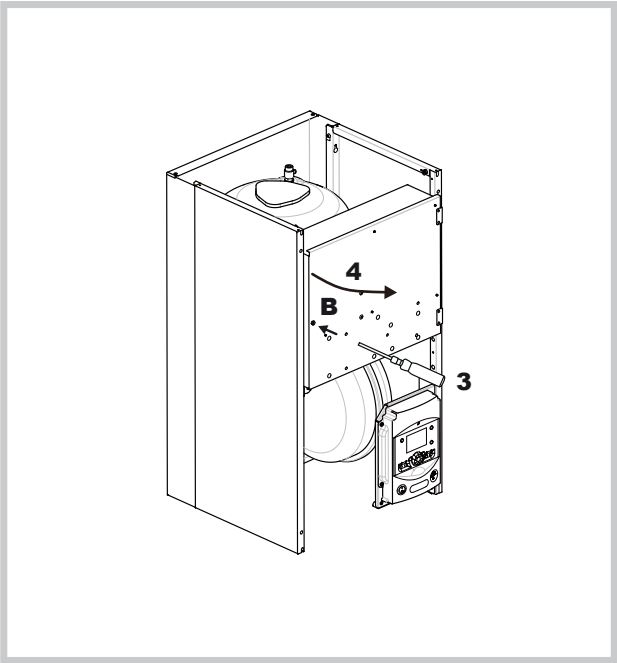

Access to hydraulic unit electric box

Note:
Ensure that the general electrical power supply has been cut off before starting any repair work .
The rearmament of safety thermostat should be done by a professional .

CONTROL SYSTEM

- **Make the connections in accordance with the diagram(s).**

  Do not place the sensor lines and the sector supply lines in parallel in order to avoid causing inadvertent interference due to voltage points in the sector supply.
  Ensure that all the electrical cables are housed in the spaces provided for this purpose inside the lifting handles.

Single phase model

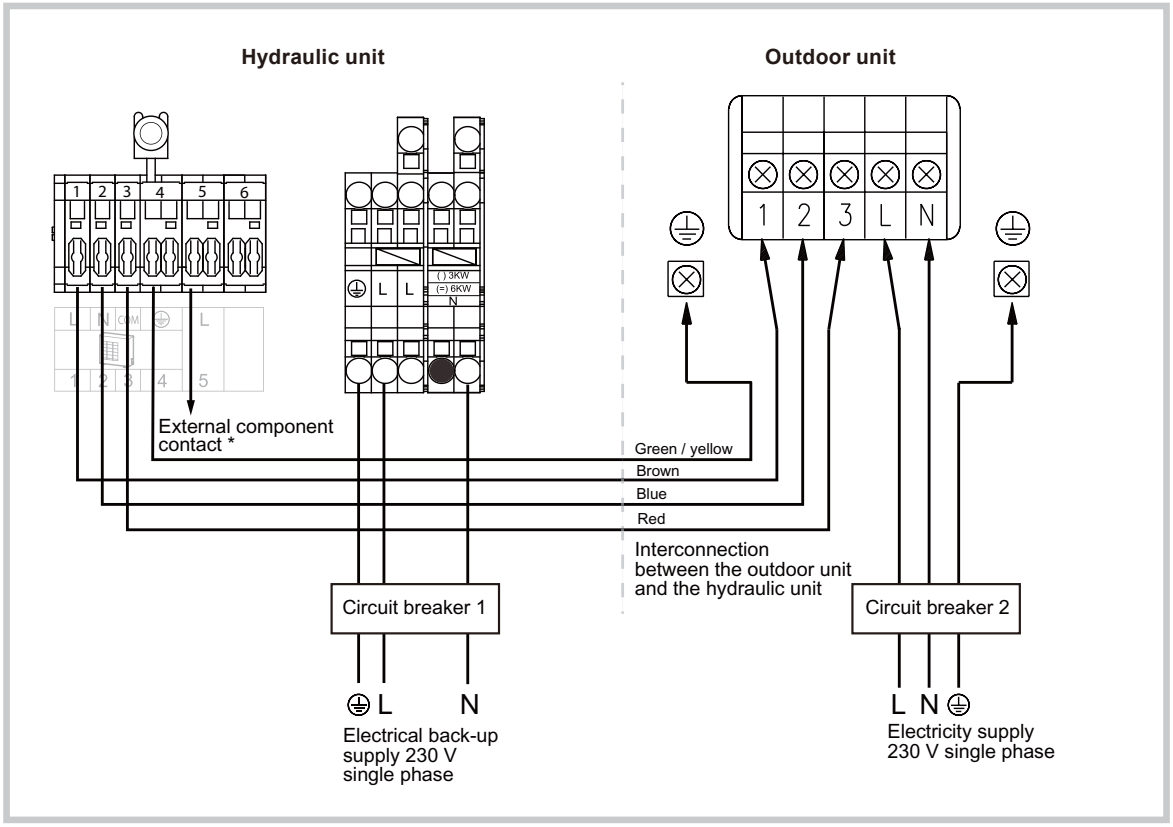

Note:
Ensure that the general electrical power supply has been cut off before starting any repair work.
The rearmament of safety thermostat should be done by a professional.

CONTROL SYSTEM

• Interconnection between the outdoor unit and the indoor unit

Comply with the correspondence between the markings on the indoor unit's terminals and those on the outdoor unit when connecting the interconnection cables.
A connection error could cause the destruction of one or other of the units.

• Electric back-ups

If the heat pump is not installed with a boiler connection:

- Connect the electrical supply for the back-ups to the electrical panel.

• Boiler connection

- Please refer to the instructions supplied with the boiler connection kit.
- Please refer to the instructions supplied with the boiler.

• Domectic hot water tank

If the installation is fitted with a DHW tank with electrical back-up heating:

- Please refer to the instructions supplied with the DHW kit.
- Please refer to the instructions supplied with the DHW tank.

• Second heating circuit

- Please refer to the instructions supplied with the second circuit kit or / and Regulation extension kit.

• Contract with the power provider

The heat pump's operation can be controlled to suit special contracts (e.g. Low-tariff, day/night).
In particular, domestic hot water (DHW) at Nominal temperature will be produced during the off-peak hours when electricity is cheaper.

- Connect the "Power Provider" contact to input EX2.
- Set the parameter line 1620 to "Low-tariff".
- 230V on input EX2 = "Peak hours" information activated.

• Power limitation or EJP (peak day removal)

Power limitation is intended to reduce electrical consumption when this is too high compared to the contract with the power provider.

- Connect the power limiting device to input EX, the back-ups for the heat pump and the DHW stop in the event of over-consumption by the dwelling.
- 230 V on input EX1 = power limitation in progress.

• External faults the heat pump

Any component of carryforward of information (thermostat, pressure switch, etc.) may signal an external problem and stop the heat pump.

- Connect the external component to input EX3.
- 230 V on input EX3 = stoppage of heat pump (the system displays Error 369).
- In the case of a heated floor, connect the floor heating safety device into the connector of the floor heating pump.

CONTROL SYSTEM

3-3. CONNECTIONS TO THE HEAT PUMP REGULATOR (Accessories and options)

Single phase model

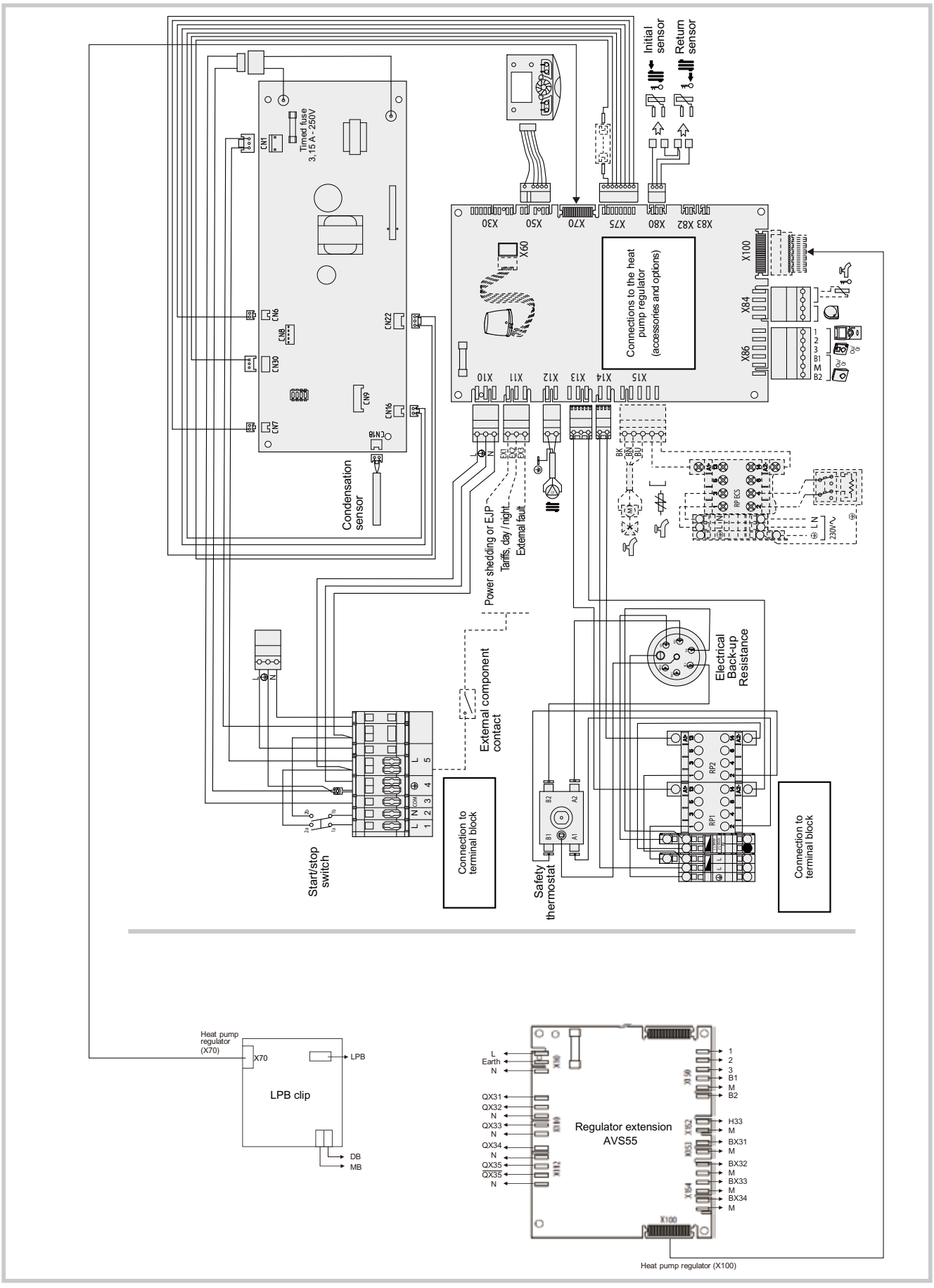

Connections to the heat pump regulator (accessories and options)

Single phase

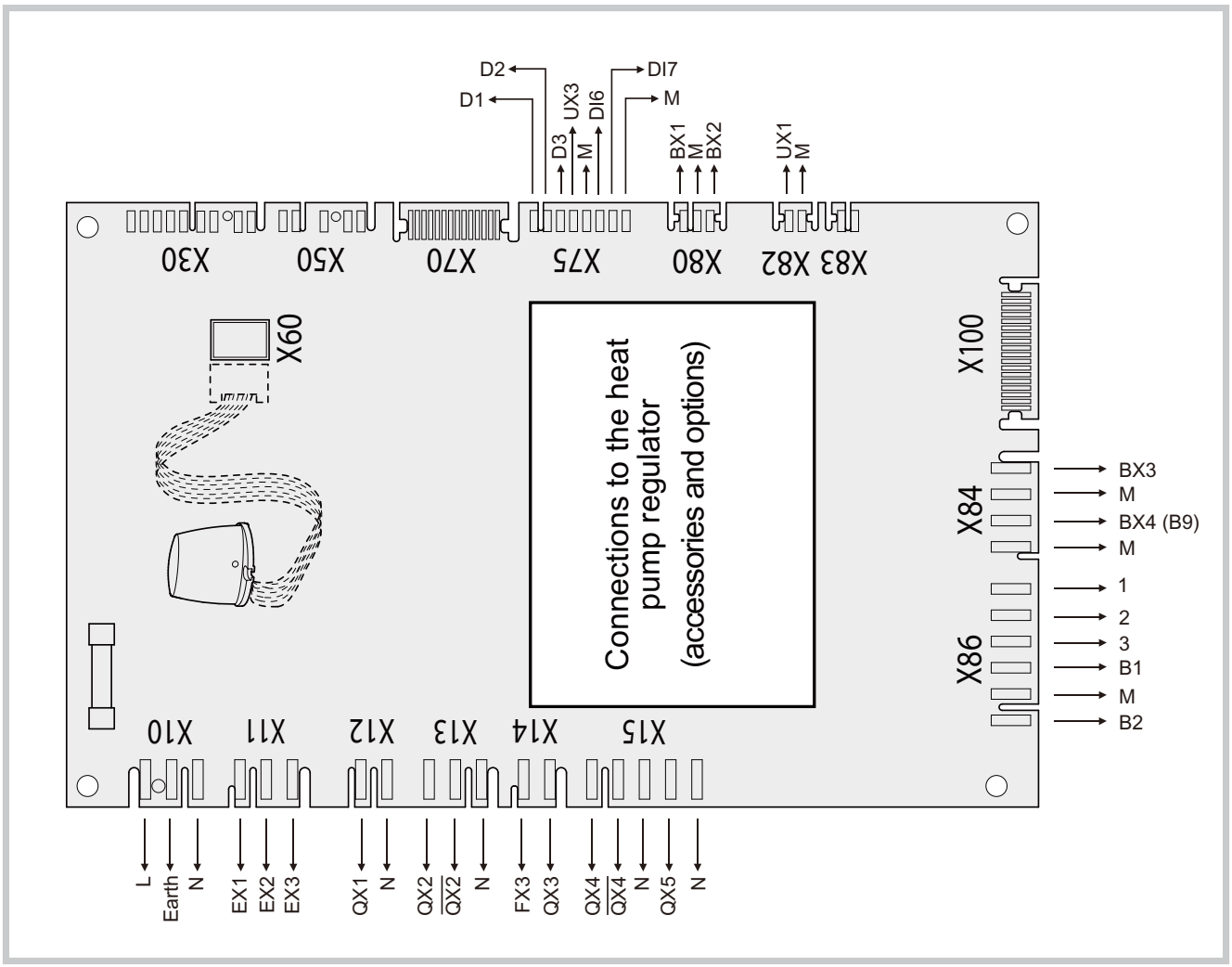

Connections to the heat pump regulatorl (accessories and options)

CONTROL SYSTEM

■ CONNECTION TERMINALS

● Heat pump regulator RVS21.827

Low voltage

Terminal		Use
X75	M	GND (common with interface PCB)
	DI7	HP error
	DI6	Defrost
	Uref	Compressor modulation
	UX3	
	D3	HP operation ON/OFF
	DO2	HP operation mode(HEAT/COOL)
X80	BX1	Flow sensor
	M	Common
	BX2	Return sensor
X82	UX1	(Not used)
	M	
X84	BX3	DHW sensor
	M	
	BX4	Outdoor sensor
	M	
X86	1	Room thermostat or Remote control
	2	
	3	
	B1	Room thermostat
	M	
	B2	
X30		(Not used)
X50		User interface
X60		RF module
X70		LPB clip
X100		Regulation extension kit (UTW-KREXD)

Main voltage

Terminal		Use
X10	L	Power supply
	Earth	
	N	
X11	EX1	Power shedding
	EX2	Peak time / off-peak times
	EX3	External fault
X12	QX1	Circulation pump(*1)
	N	
X13	QX2	Back-up HTR 1 or Distribution valve for boiler (Single phase model)
	$\overline{QX2}$ (inverted)	
	N	
X14	FX3	Back-up HTR 2 or Boiler control (ON/OFF) (Single phase model)
	QX3	
X15	QX4	Distribution valve for DHW
	$\overline{QX4}$ (inverted)	
	N	
	QX5	Back-up HTR for DHW
	N	

Remark: Colored items are for options.
(*1) If the 2nd circuit kit are installed in the system, this circulation pump is assigned for higher temperature circuit.

● Regulation extension kit (UTW-KREXD)

Low voltage

Terminal		Use
X150	1	Room thermostat or Remote control for lower temperature circuit
	2	
	3	
	B1	
	M	
	B2	
X152	H33	External input (*2)
	M	
X153	BX31	Flow sensor for lower temperature circuit
	M	
X154	BX32	(Not used)
	M	
	BX33	
	M	
	BX34	Swimming pool temperature sensor
	M	
X100		Heat pump regulator

Main voltage

Terminal		Use
X10	L	Power supply
	Earth	
	N	
X110	QX31	Mixing valve for 2nd circuit or Pilot wire(*3)
	QX32	
	N	
	QX33	Circulation pump for lower temperature circuit
	N	
X112	QX34	(Not used)
	N	
	QX35	Distribution valve for swimming pool
	$\overline{QX35}$ (inverted)	
	N	

Remark: (*2) Input H33 can be applied to one of several functions.(See "Input H33 function"for detail.)
(*3) See "Regulation extension kit AVS 55" manual for detail.

CONTROL SYSTEM

■ OUTDOOR SENSOR

The outdoor sensor is required for the heat pump to operate correctly.
Consult the fitting instructions on the sensor's packaging.
Place the sensor on the coldest part, generally the northern or north-eastern side.
In any case, it must not be exposed to the morning sun.
It must be installed so as to be easily accessible but at least 2,5 m from the floor.
It is essential that it avoid any sources of heat such as flues, the upper parts of doors and windows, proximity to extraction vents, the underneath of balconies and under-eave areas which would isolate the sensor from variations in the outdoor air temperature.

- Connect the outdoor sensor to the M and BX4 (B9) terminals on the heat pump control board.

■ ROOM THERMOSTAT AND / OR REMOTE CONTROL

The room thermostat (remote control) is optional.
Consult the fitting instructions on the sensor's packaging.
The sensor must be installed in the living room area on a very uncluttered wall, 1,5 m above the floor.
Avoid direct sources of heat (chimney/flue, television, cooking hobs), draughty areas (ventilation, door, etc.).
Air leaks in the seals in the constructions are often translated into cold air blowing through the electrical conduits. Lag the electrical conduits if there is a cold draught on the back of the IR sensor.

• Installing a room thermostat
- Room thermostat
  - Connect the room thermostat to the X86 connector of the heat pump's regulator board using the connector provided (terminals 1, 2).
- Room thermostat radio
  - Connect the wireless room thermostat radio to the connector X60.

• Installing a remote control
- Remote control unit
  - Connect the remote control unit to the X86 connector of the heat pump's regulator board using the connector provided (terminals 1, 2 and 3).
- Remote control unit radio
  - Connect the wireless remote control unit radio to the connector X60.

■ DHW SENSOR

If the installation is equipped with a DHW tank (with electric back-up):

- Place the domestic hot water sensor in the housing for the cylinder sensors.
- Connect the domestic hot water sensor to terminal BX3 and M.

CONTROL SYSTEM

■ START-UP

- Make sure that ALL DIP SW on the interface card are OFF before starting up. DIP SW shuold be set OFF for normal operation. Power supply to the indoor unit must be turned off while toching DIP SW.
- Close the installation's main circuit breaker.
  On first commissioning (or in winter), in order to allow the compressor to pre-heat, engage the installation's main circuit breaker (power supply to the outdoor unit) some hours before starting up the tests.
- Engage the start/stop switch.
  To ensure that inputs EX1, EX2 and EX3 operate correctly : Check that the live-neutral polarity of the electrical supply is correct.
  When the power is switched on and every time that the ON/OFF button is switched off and then switched on again, the outdoor unit will take approximately 4 minutes to start up, even if the setting is requesting heating.
  The display can show error 370 when the appliance (re)starts. Do not be concerned, the communication between the outdoor and indoor unit will re-establish itself in a few moments.

During the regulator initialisation phase, the display shows all the symbols and then "Data update" and then "State heat pump".

- Make all the specific adjustments to the setting (configuring the installation).
- Press the key OK
- Hold down the key i for 3s and select the level of access used with the aid of the knob .
- Confirm with the key OK

Parameter the heat pump's setting (See "■ FUNCTION TABLE of 2-3 CONTROL SETTING".).
On commissioning (or the case of error 10), the electrical backup heaters may start up even if the outdoor temperature at the time is above the heaters' trigger temperature.
The regulating system uses an average initial outdoor temperature of 0°C and requires some time to update this temperature.
To avoid this situation, the sensor must be connected correctly.
Re-initialise line 8703 (commissioning level, Consumer diagnostic menu).

CONTROL SYSTEM

■ CONFIGURING THE ROOM THERMOSTAT

Configure the room thermostat and connect it to the appropriate heating zone:

- Hold down the presence key for more than 3 seconds. The room thermostat displays RU and a number flashes.
- Turn the wheel to choose the zone (1, 2).
  ☞**If the installation is fitted with 2 room thermostats,**
  - First connect one room thermostat and configure it in zone 2.
  - Then connect the other room thermostat and configure it as default in zone 1.
- Hold down the presence key; the room thermostat displays P1 and a flashing number.
  1: Automatic recording : a correction of the setting with the button is adopted without any particular confirmation (timeout) or by pressing the mode key.
  2: Recording with confirmation: a correction of the setting with the button is not adopted until the mode key is pressed.
- Press the presence key again; the room thermostat displays P2 and a flashing number.
  0: OFF : all the operating elements are engaged.
  1: ON : the following operating elements are locked:
  Switching over the heating circuit's operating mode
  Adjusting the comfort setpoint
  Changing the operating level

The room thermostat displays OFF for 3 seconds when a locked button is pressed.

■ CONFIGURING THE REMOTE CONTROL (RADIO)

During commissioning, after an initialisation period of approx. 3 minutes, the user's language must be set:

- Press the key OK
- Choose menu "Operator section".
- Choose "Language".
- Select the language menu (**English**, Français, Nederlands, Español, etc).

☞ **In the case of 2 heating circuits**

- Choose the allocation of the remote control unit (room appliance 1 or 2…) line 40*.
- According to the allocation selected check and, if necessary, modify the settings for lines 42*, 44*, 48*.

LINE	ACCESS LEVEL	FUNCTION	SETTING RANGE OR DISPLAY	FACTORY SETTING
40	I	Use as...	Room appliance 1, 2, P, User interface 1, 2, P, Service appliance	Room appliance 1
This line regulates the use of the room control unit. Depending on how it is used, other settings will be necessary (lines 42, 44, 48).				
42	I	Appliance allocation 1	Heating circuit 1, Heating circuit 1 & 2, Heating circuit 1 & P, All the heating circuits	Heating circuit 1
44	I	Operation HC2 (command HC2)	Commonly with HC1, Independent	Commonly with HC1
This function enables you to choose whether you wish the room thermostat (as an option) to act on both zones or just a single zone.				
48	I	Occupancy control switch function	Without, Heating circuit 1, Heating circuit 2, Common	

* These parameter lines are only accessible from the remote control unit.

CONTROL SYSTEM

4. INSTALLATION

4-1. OUTDOOR SENSOR

■ MODEL: QAC34

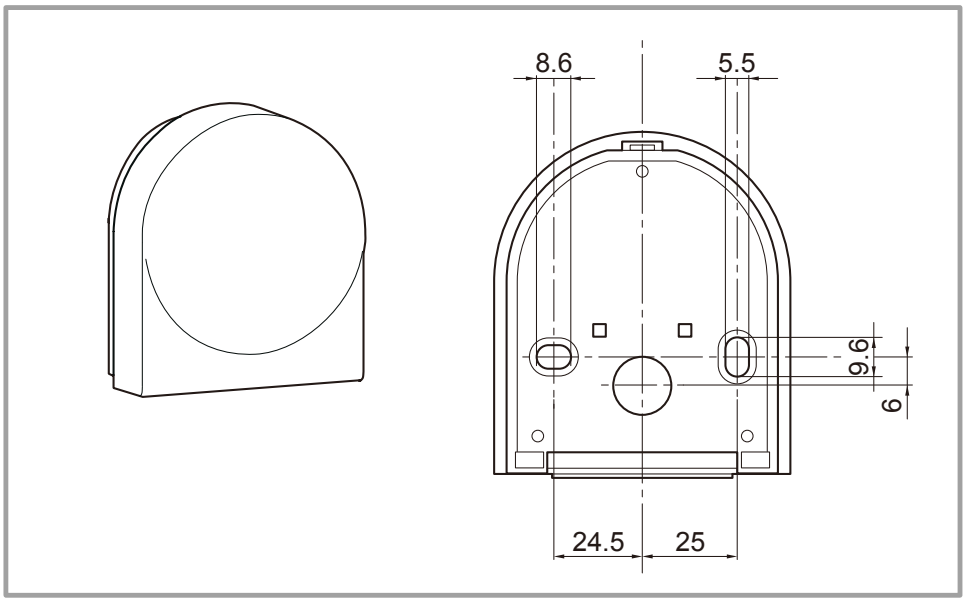

● Installation

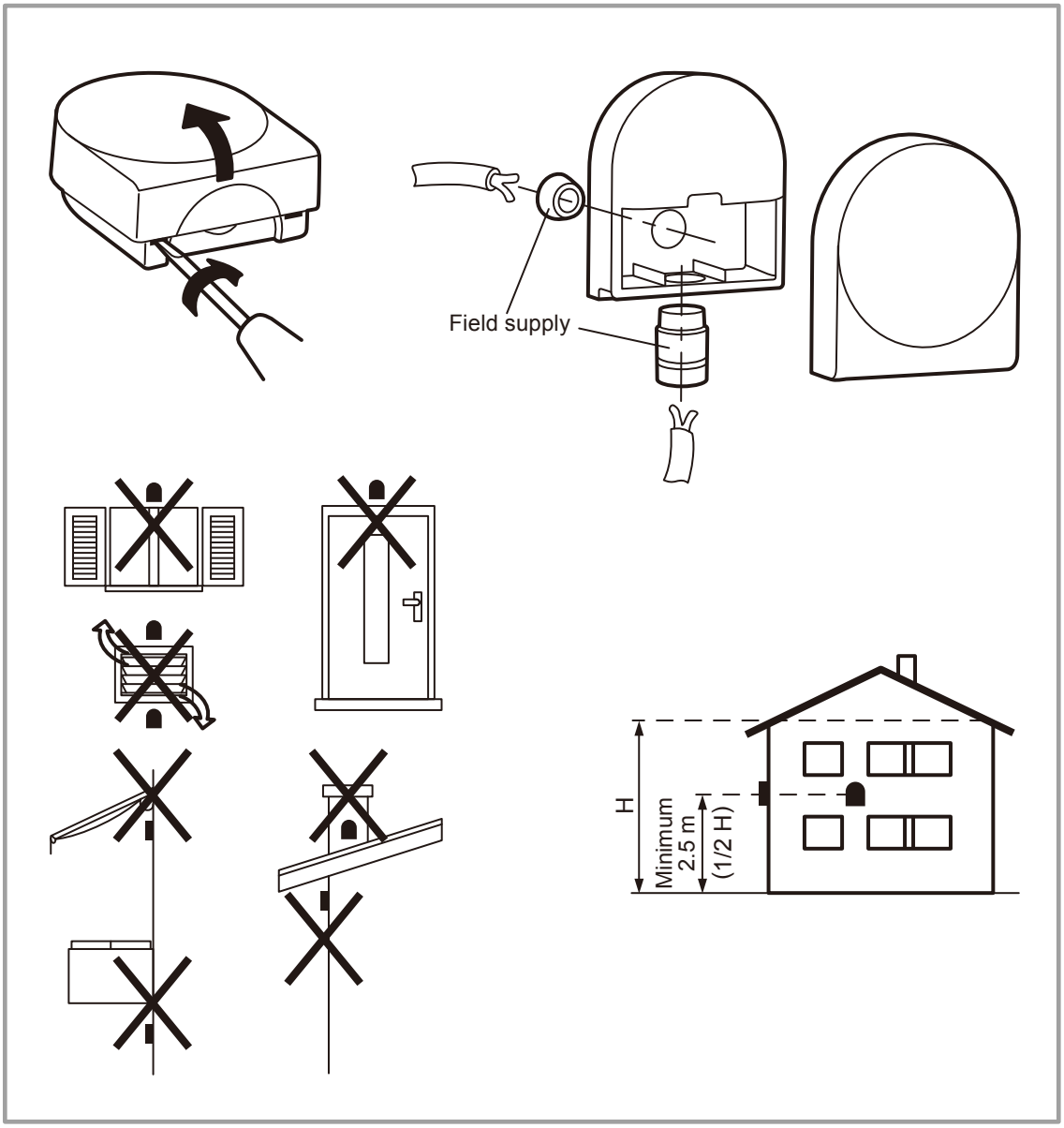

CONTROL SYSTEM

4-2. REMOTE CONTROL (Optional parts)

■ MODEL: UTW-C75XA

The remote control includes the functions of the room unit together with those of the user interface mounted in series on the indoor unit.
It can be used, therefore, not only to measure the room temperature, but also to view the operating status of the heat pump, to enter the heat pump settings.

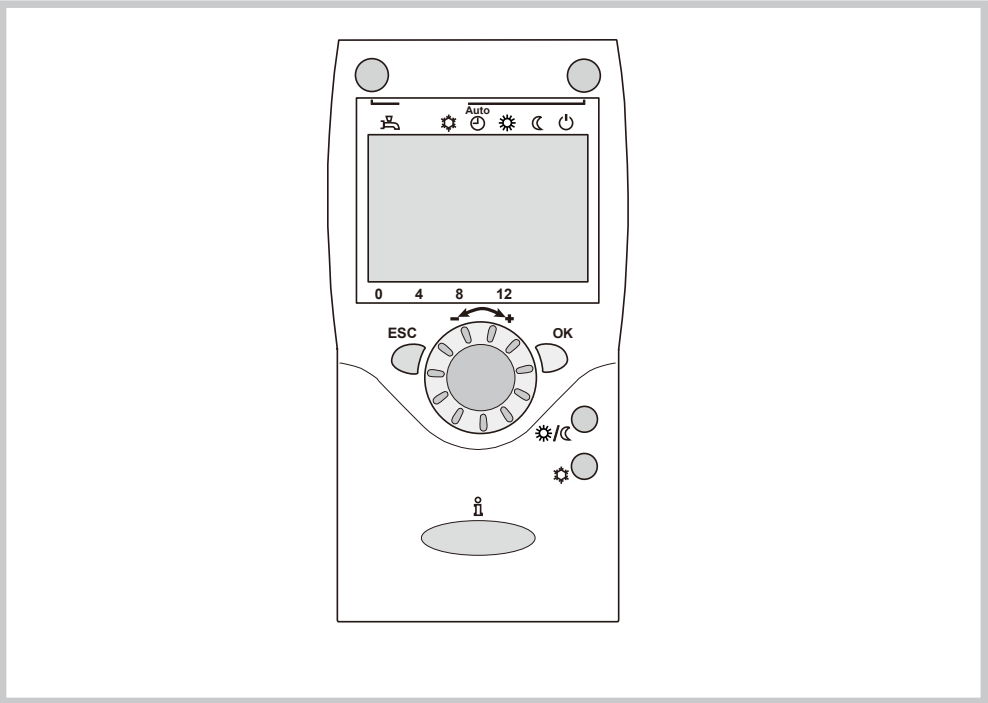

● Installation

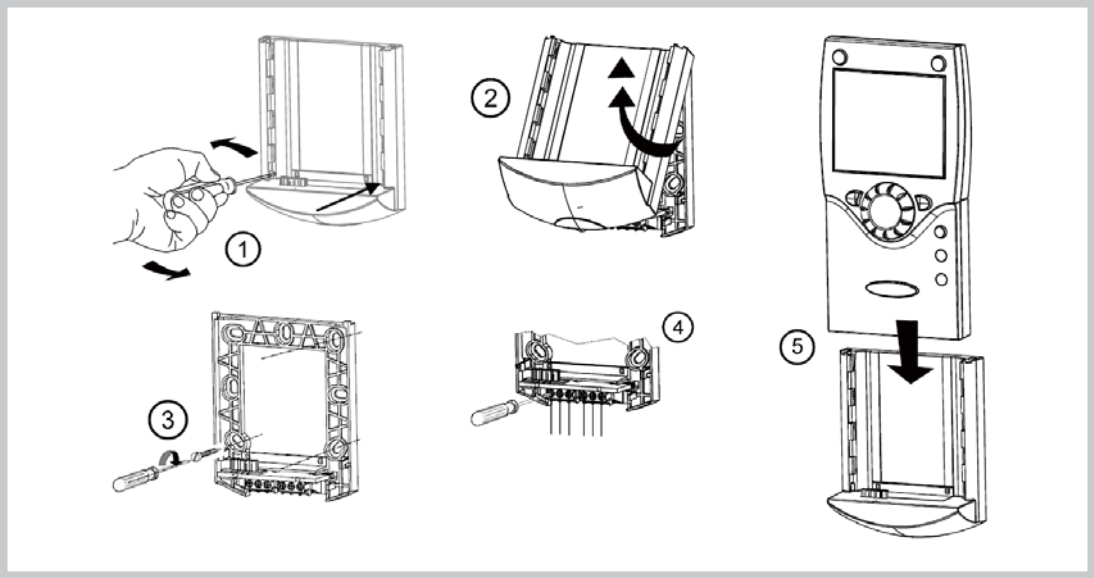

CONTROL SYSTEM

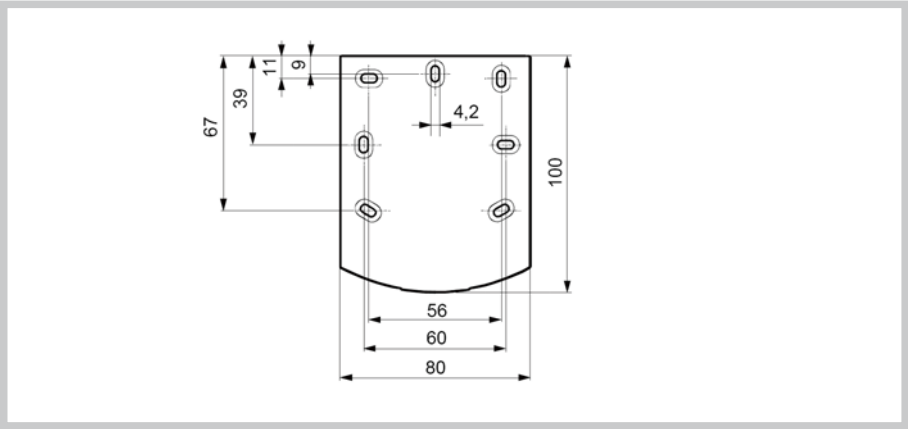

● Connections

The remote control must be connected to the connector X86 (terminal 1, 2, 3) of the heat pump controller board.
To do this, you can use a 0.5mm² cable of the two-pair telephone cable type.

If the cable is shielded, the shielding can be connected to the controller terminal 2. It may under no circumstances be connected on both sides, i.e. heat pump regulator side and room unit side.

Terminal C75	Control terminal	Function
1	X86 terminal 1	BSB data
2	X86 terminal 2	BSB ground
3	X86 terminal 3	Power supply DC12V

CONTROL SYSTEM

■ MODEL: UTW-C78XD (Wireless)

The remote control includes the functions of the room unit together with those of the user interface mounted in series on the indoor unit.
It can be used, therefore, not only to measure the room temperature, but also to view the operating status of the heat pump, to enter the heat pump settings.

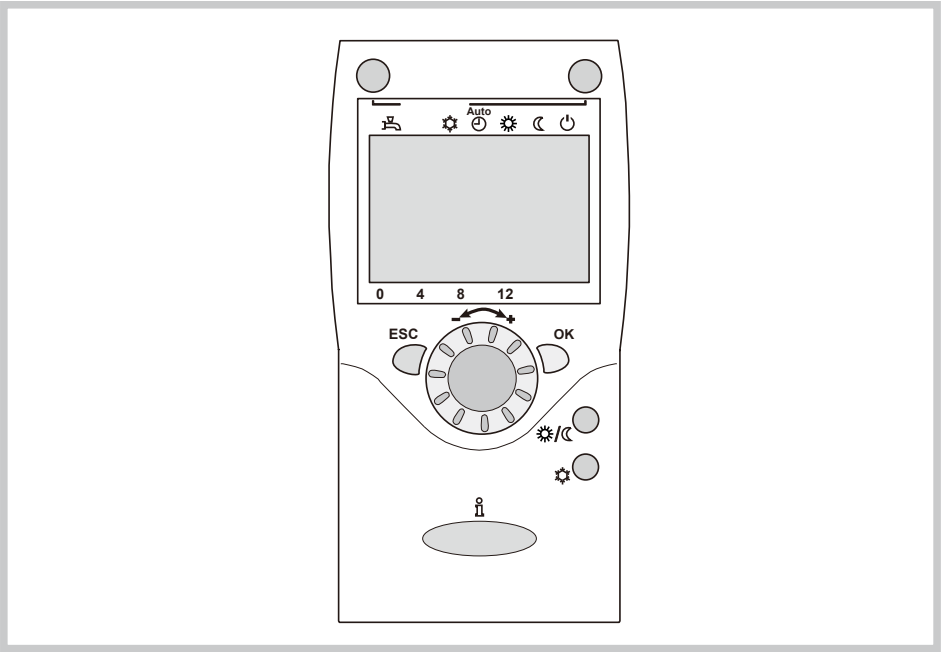

● Installation

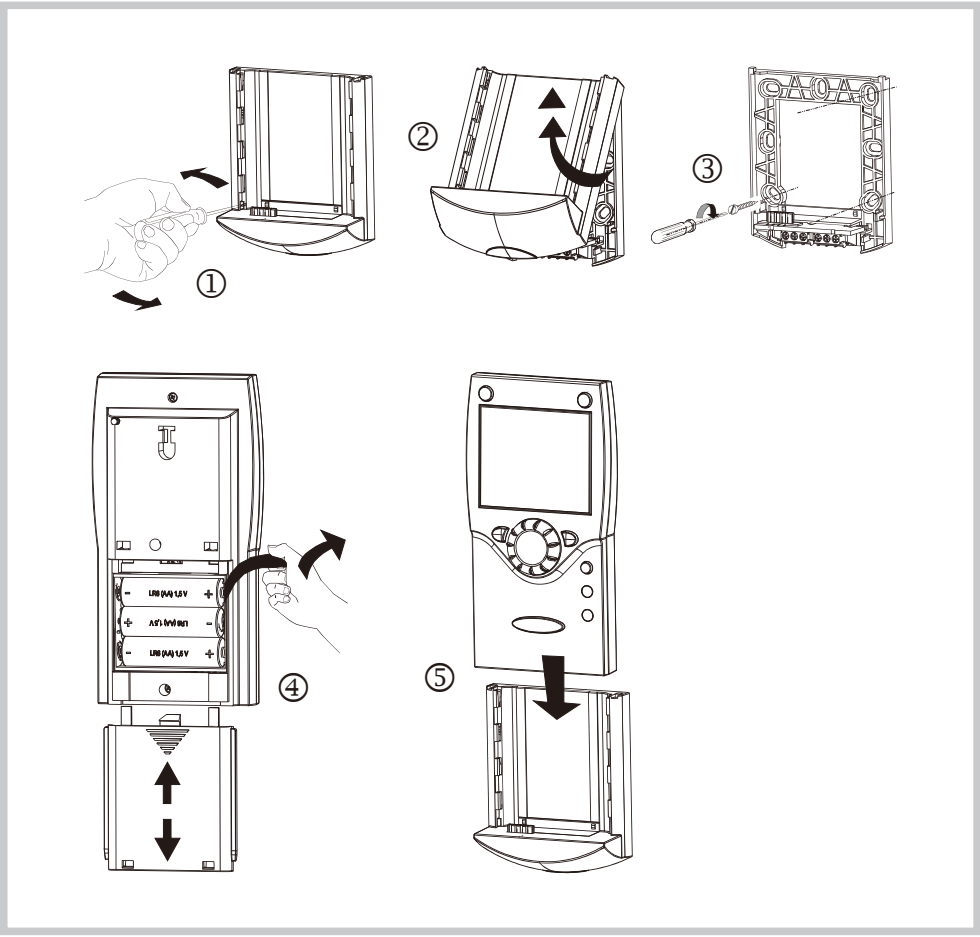

The remote control is powered by three 1.5 V alkaline batteries type AA (LR06).

CONTROL SYSTEM

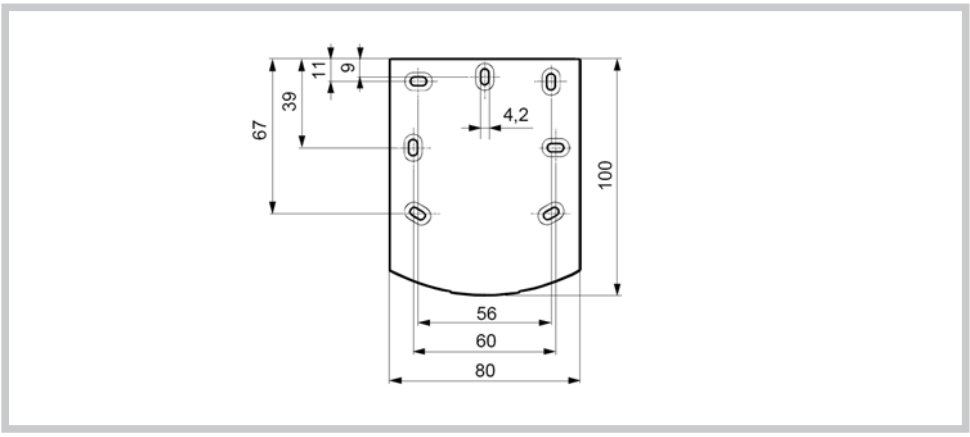

CONTROL SYSTEM

4-3. ROOM THERMOSTAT (Optional parts)

■ MODEL: UTW-C55XA

The room thermostat is optional. Select an appropriate place for the room thermostat by following these rules:

- Central room
- Installation height, approx. 1.5 m
- Inner wall
- Away from drafts
- Away from direct sunlight
- Do not install the thermostat behind a door or in any other place where it may receive shocks.

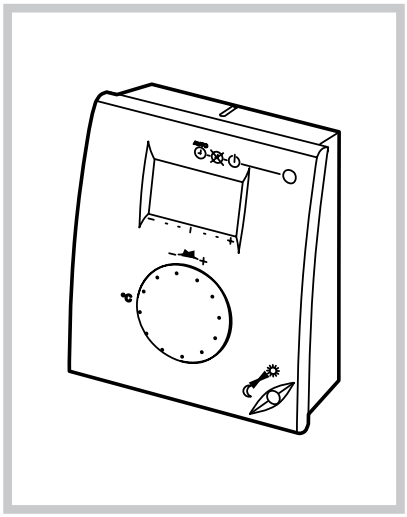

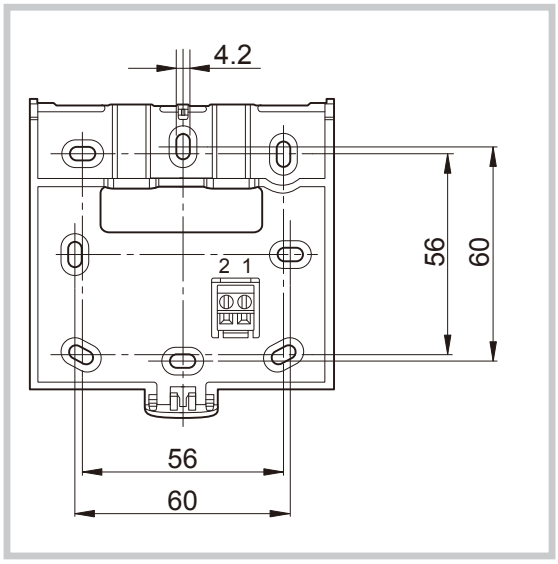

Air tightness faults in buildings often result in cold air being blown through the electrical sheathing.

Do not hesitate to seal them off if a cold air draft comes into the back of the thermostat.

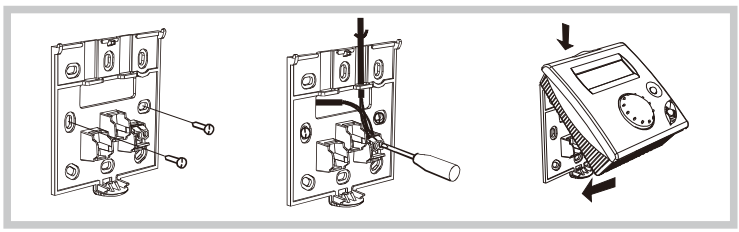

● Connections

The room thermostat must be connected to the connector X68 (terminals 1, 2) of the heat pump controller board. To do this, you can use a 0.5mm² cable of the two-pair telephone cable type.

If the cable is shielded, the shielding can be connected to the controller terminal 2. It may under no circumstances be connected on both sides, i.e. heat pump regulator side and room unit side.

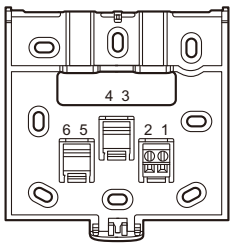

1	X68 (terminal 1)
2	X68 (terminal 2)

CONTROL SYSTEM

■ MODEL: UTW-C58XD (Wireless)

The room thermostat is optional. Select an appropriate place for the room thermostat by following these rules:

- Central room
- Installation height, approx. 1.5 m
- Inner wall
- Away from drafts
- Away from direct sunlight
- Do not install the thermostat behind a door or in any other place where it may receive shocks.

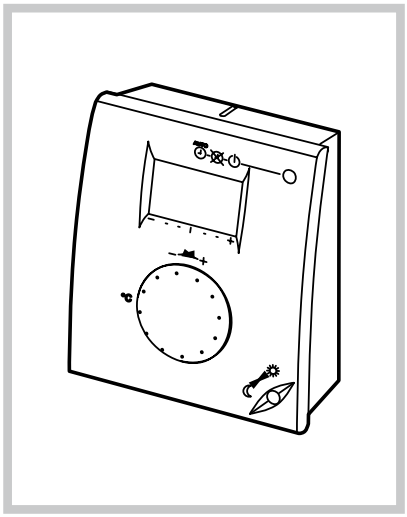

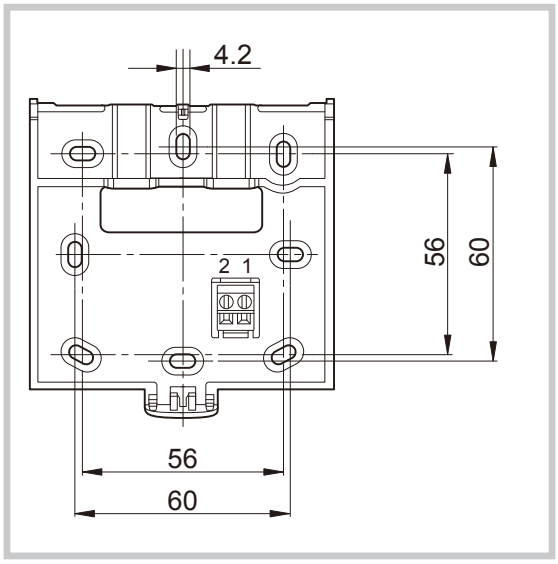

Air tightness faults in buildings often result in cold air being blown through the electrical sheathing.

Do not hesitate to seal them off if a cold air draft comes into the back of the thermostat.

- The room thermostat is powered by two 1.5 V alkaline batteries type AA (LR06).

CONTROL SYSTEM

4-4. RF MODULE (Optional parts)

■ MODEL: UTW-M60XD, UTW-MRCXD

- The wireless components should be located such that transmission is as interference-free as possible. The following criteria must be observed:
- Not in the vicinity of electrical cables, strong magnetic fields or equipment, such as PCs, TV sets, microwave ovens, etc.
- Not near larger metal structures or constructional elements with fine metal meshes, such as special glass or special concrete
- The distance to the transmitter should not exceed 30 meters or 2 floors

● UTW-M60XD

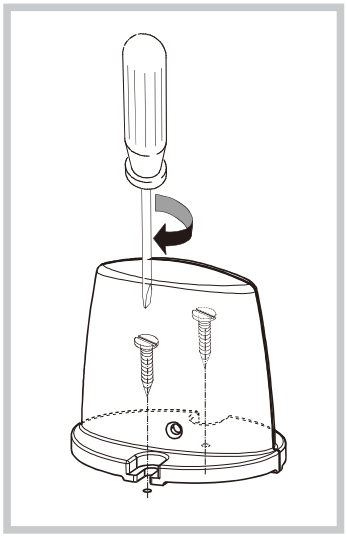

- Do not install the RF module inside metal casings.

● UTW-MRCXD

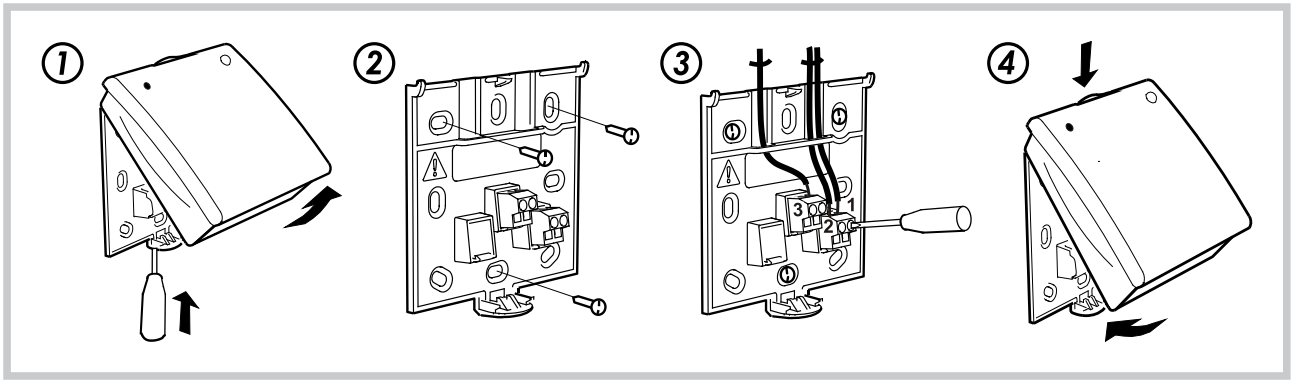

● Connections

- UTW-M60XD
The prefabricated cable is to be connected to terminal X60 of the heat pump's regulator.

- UTW-MRCXD
The RF module must be connected to the connector X150 (terminals 1, 2, 3) of the regulation extension kit. To do this, you can use a 0.5mm² cable of the two-pair telephone cable type.

If the cable is shielded, the shielding can be connected to the controller terminal 2. It may under no circumstances be connected on both sides, i.e. heat pump regulator side and room unit side.

CONTROL SYSTEM

5. DIMENSIONS

5-1. OUTDOOR SENSOR

■ MODEL: QAC34

(Unit : mm)

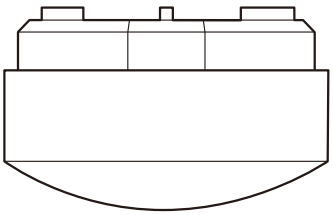

Top view

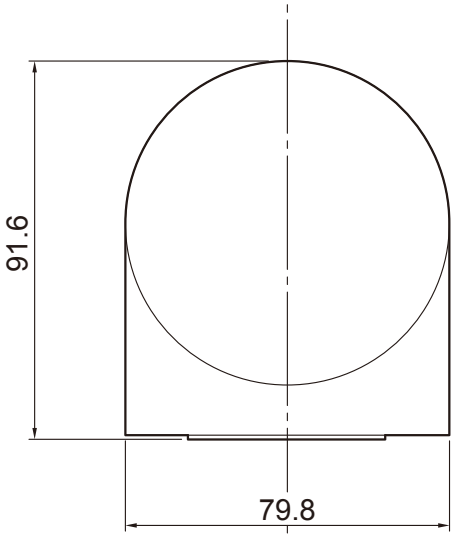

Front view

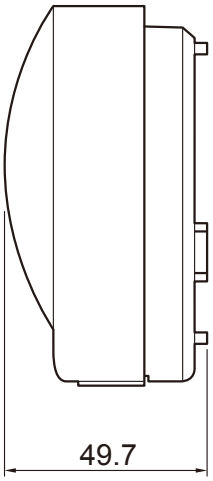

Side view

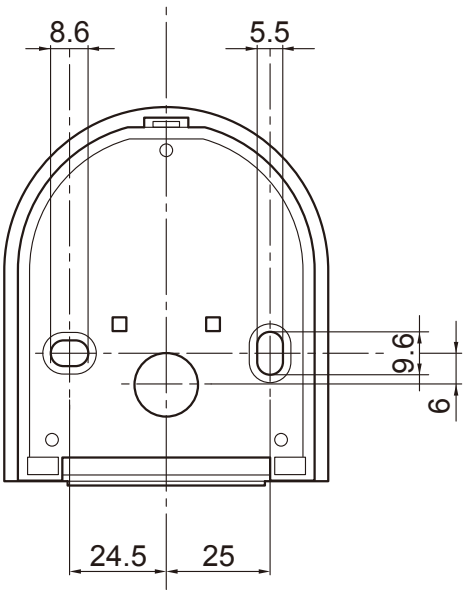

Rear view

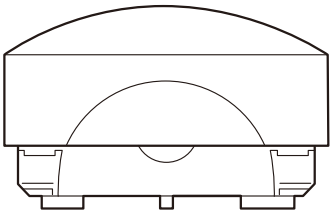

Bottom view

CONTROL SYSTEM

5-2. REMOTE CONTROL (Optional parts)

■ MODEL: UTW-C75XA / UTW-C78XD (Wireless)

● Controller

(Unit : mm)

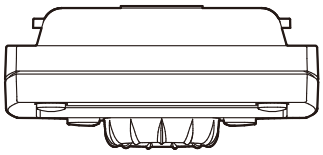

Top view

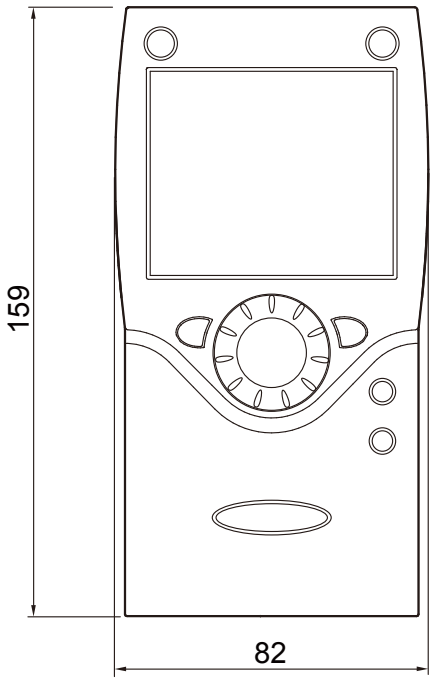

Front view

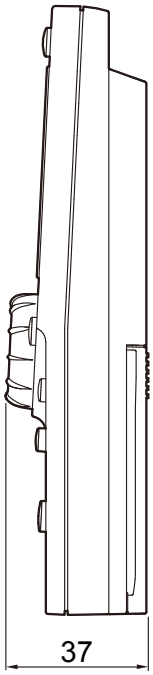

Side view

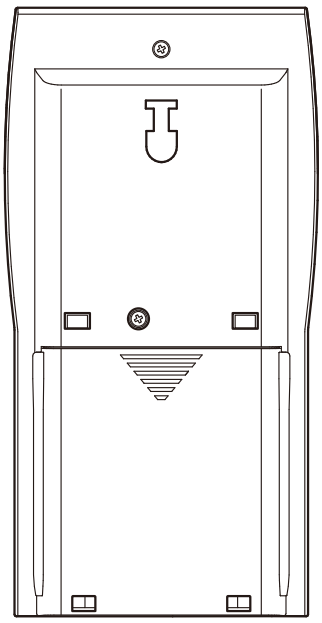

Rear view

● Holder

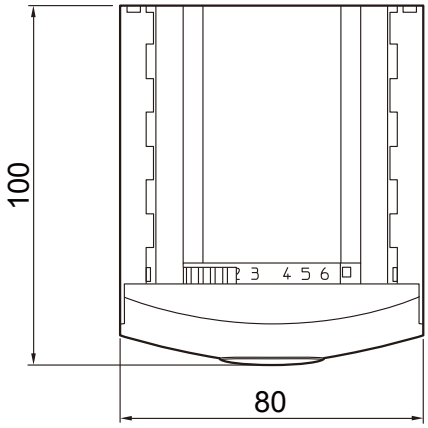

Front view

Side view

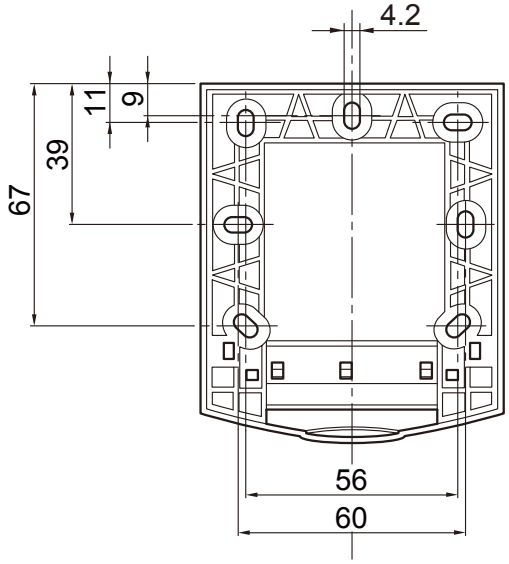

Rear view

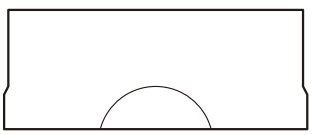

Bottom view

CONTROL SYSTEM

5-3. ROOM THERMOSTAT (Optional parts)

■ MODEL: UTW-C55XA / UTW-C58XD (Wireless)

● Unit

(Unit : mm)

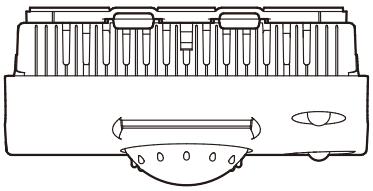

Top view

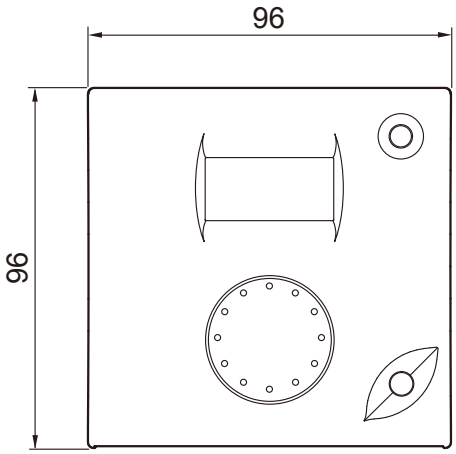

Front view

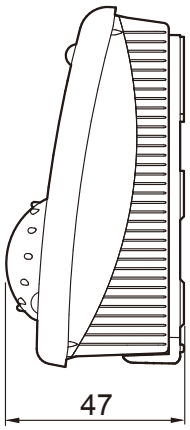

Side view

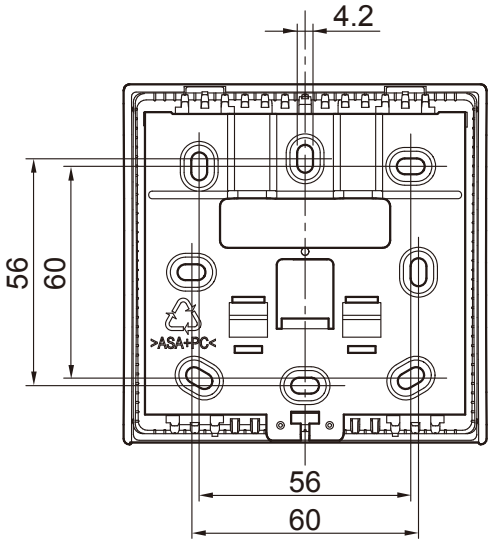

Rear view

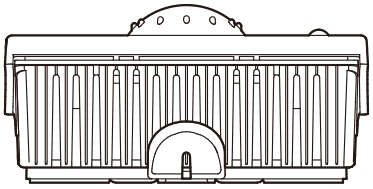

Bottom view

CONTROL SYSTEM

5-4. RF MODULE (Optional parts)

■ MODEL: UTW-M60XD

(Unit : mm)

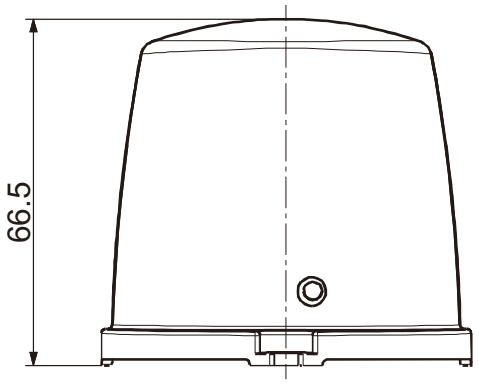

Front view

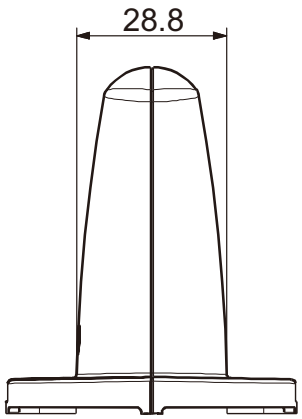

Side view

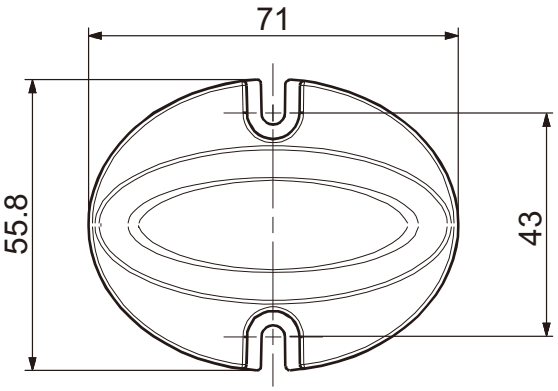

Bottom view

CONTROL SYSTEM

■ MODEL: UTW-MRCXD

(Unit : mm)

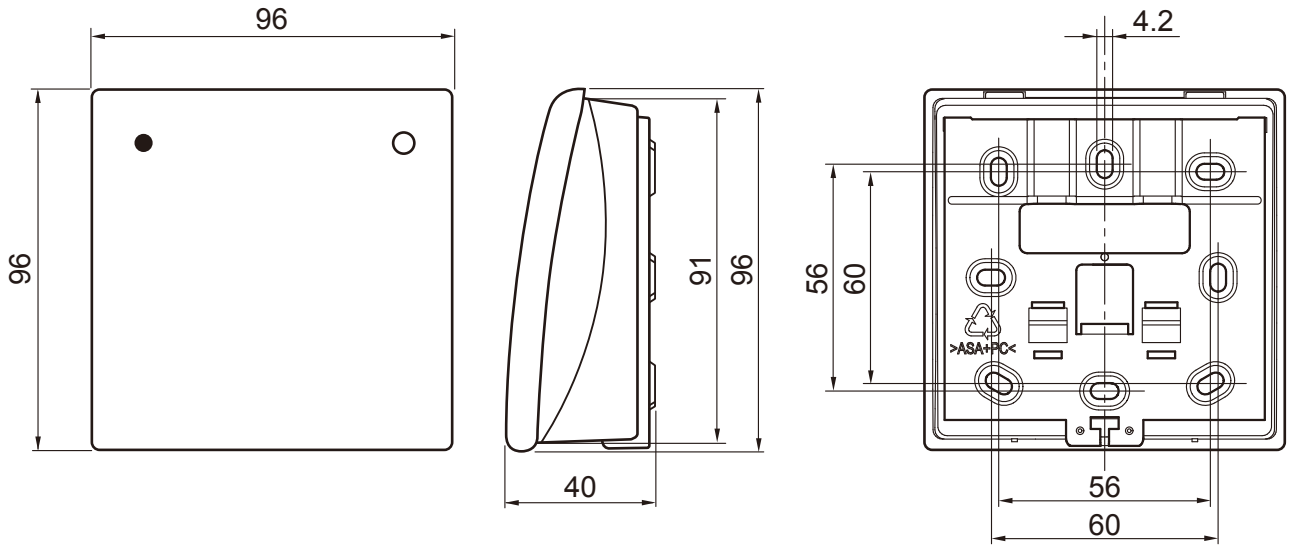

Front view　　Side view　　Rear view

CONTROL SYSTEM

6. PACKING LIST (Accessories)

6-1. REMOTE CONTROL (Optional parts)

■ MODEL: UTW-C75XA* / UTW-C78XD (wireless)

Name and shape	Quantity	Application
Remote control 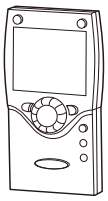	1	**Use for ATW operation**
Remote control holder 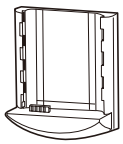	1	**Use as remote control holder**
Remote control connector (UTW-C75XA only) 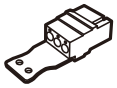	1	**For remote control connection**
Operating instructions	1	

* : If necessary , use shielded cable and tapping screw (Field supplied) in accordance with the standard of the country.

6-2. ROOM THERMOSTAT (Optional parts)

■ MODEL: UTW-C55XA* / UTW-C58XD (Wireless)

Name and shape	Quantity	Application
Room thermostat 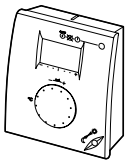	1	
Room thermostat connector (UTW-C55XA only) 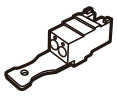	1	**For room thermostat connection**
Operating instructions 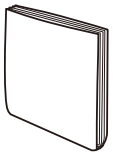	1	

* : If necessary , use shielded cable (Field supplied) in accordance with the standard of the country.

CONTROL SYSTEM

6-3. RF MODULE (Optional parts)

■ MODEL: UTW-M60XD

Name and shape	Quantity	Application
RF MODULE 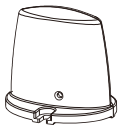	1	
Operating instructions	1	

■ MODEL: UTW-MRCXD

Name and shape	Quantity	Application
RF MODULE 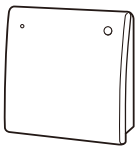	1	
Operating instructions	1	

CONTROL SYSTEM

7. WIRING SPECIFICATIONS

7-1. OUTDOOR SENSOR

■ MODEL: QAC34

Use	Size	Wire type	Remarks
Outdoor sensor cable	0.75 mm²	2 wires connection Max. cable length: 60 m	Use shielded (field supplied) in accordance with the regional cable standard

7-2. REMOTE CONTROL (Optional parts)

■ MODEL: UTW-C75XA

Use	Size	Wire type	Remarks
Remote control cable	0.5 mm²	3 wires connection Max. cable length: 200 m	Use shielded (field supplied) in accordance with the regional cable standard

CONTROL SYSTEM

7-3. ROOM THERMOSTAT (Optional parts)

■ MODEL: UTW-C55XA

Use	Size	Wire type	Remarks
Room thermostat cable	0.5 mm²	2 wires connection Max. cable length: 200 m	Use shielded (field supplied) in accordance with the regional cable standard

7-4. RF MODULE (Optional parts)

■ MODEL: UTW-MRCXD

Use	Size	Wire type	Remarks
RF module cable	0.5 mm²	3 wires connection Max. cable length: 200 m	Use shielded (field supplied) in accordance with the regional cable standard

8. SPECIFICATIONS

8-1. OUTDOOR SENSOR

■ MODEL: QAC34

SIZE (H x W x D mm)	91.6 x 79.8 x 49.7
WEIGHT (g)	73
CABLE LENGTH (m)	60

8-2. REMOTE CONTROL (Optional parts)

■ MODEL: UTW-C75XA

SIZE (H x W x D mm)	185 x 82 x 42
WEIGHT (g)	170
CABLE LENGTH (m)	200
POWER (V)	12

■ MODEL: UTW-C78XD (wireless)

SIZE (H x W x D mm)	185 x 82 x 42
WEIGHT (g)	312
BATTERIES	1.5V alkaline size AA (LR06) 3 pieces
FREQUENCY BAND (MHz)	868

CONTROL SYSTEM

8-3. ROOM THERMOSTAT (Optional parts)

■ MODEL: UTW-C55XA

SIZE (H x W x D mm)	96 x 96 x 47
WEIGHT (g)	115
CABLE LENGTH (m)	Max. 200
POWER (V)	12

■ MODEL: UTW-C58XD (Wireless)

SIZE (H x W x D mm)	96 x 96 x 47
WEIGHT (g)	165
BATTERIES	1.5V alkaline size AA (LR06) 2 pieces
FREQUENCY BAND (MHz)	868

8-4. RF MODULE (Optional parts)

■ MODEL: UTW-M60XD

SIZE (H x W x D mm)	67 x 71 x 56
WEIGHT (g)	54
CABLE LENGTH (m)	1.5
POWER (V)	5.5
FREQUENCY BAND (MHz)	868

■ MODEL: UTW-MRCXD

SIZE (H x W x D mm)	96 x 96 x 40
WEIGHT (g)	115
CABLE LENGTH (m)	Max. 200
POWER (V)	12
FREQUENCY BAND (MHz)	868

CONTROL SYSTEM

WATERSTAGE™

INNOVATIVE SOLUTION OF DOMESTIC HEATING

" WATERSTAGE " is a worldwide trademark of FUJITSU GENERAL LIMITED.

Copyright© 2009-2013 Fujitsu General Limited. All rights reserved.

Product specifications are subject to change without notice.

ISO 9001 Certified number:09 100 89394 ISO 14001 Certified number:09 104 9245

Fujitsu General (Thailand) Co., Ltd.

Distributed by :

FUJITSU GENERAL LIMITED

1116, Suenaga, Takatsu-ku, Kawasaki 213-8502, Japan

http://www.fujitsu-general.com/