FUJITSU

SPLIT TYPE
ROOM AIR CONDITIONER
WALL MOUNTED TYPE

SERVICE MANUAL

Refrigerant R410A

Indoor unit	Outdoor unit
ASYG07LMCA	AOYG07LMCA
ASYG09LMCA	AOYG09LMCA
ASYG12LMCA	AOYG12LMCA

CONTENTS

SPECIFICATIONS 1
DIMENSIONS 2
REFRIGERANT SYSTEM DIAGRAM 3
CIRCUIT DIAGRAM 4
INDOOR PCB CIRCUIT DIAGRAM 5
OUTDOOR PCB CIRCUIT DIAGRAM . . . 9
ERROR DETECTION 11
PARTS (INDOOR UNIT) 12
PARTS (OUTDOOR UNIT) 16
ACCESSORIES 20

FUJITSU GENERAL LIMITED

SPECIFICATIONS

ELECTRICAL DATA

TYPE		Cool & heat inverter		
INDOOR UNIT		ASYG07LMCA	ASYG09LMCA	ASYG12LMCA
OUTDOOR UNIT		AOYG07LMCA	AOYG09LMCA	AOYG12LMCA
COOLING CAPACITY		2.00 kW	2.50 kW	3.40 kW
HEATING CAPACITY		3.00 kW	3.20 kW	4.00 kW
POWER SOURCE		230 V		
FREQUENCY		50 Hz		
RUNNING CURRENT	Cooling	2.5 A	3.2 A	4.6 A
	Heating	3.3 A	3.5 A	4.8 A
INPUT WATTS	Cooling	0.47 kW	0.65 kW	0.97 kW
	Heating	0.69 kW	0.73 kW	1.02 kW
EER	Cooling	4.30 kW/kW	3.85 kW/kW	3.50 kW/kW
COP	Heating	4.38 kW/kW	4.38 kW/kW	3.92 kW/kW
MOISTURE REMOVAL		1.0 L/h	1.3 L/h	1.8 L/h
AIR CIRCULATION HIGH		750 m^3/h		
MAXIMUM CURRENT	Cooling	6.0 A		6.5 A
	Heating	7.5 A		9.0 A

FAN MOTOR

POWER SOURCE		230 V	
INDOOR UNIT Cooling	High	1,320 r.p.m.	
	Medium	1,160 r.p.m.	
	Low	930 r.p.m.	
	Quiet	680 r.p.m.	
INDOOR UNIT Heating	High	1,320 r.p.m.	
	Medium	1,160 r.p.m.	
	Low	980 r.p.m.	
	Quiet	710 r.p.m.	
OUTDOOR UNIT	Cooling	730 r.p.m.	860 r.p.m.
	Heating	650 r.p.m.	760 r.p.m.

NOISE LEVEL

INDOOR UNIT Cooling	High	43 dB	
	Medium	40 dB	
	Low	32 dB	
	Quiet	21 dB	
INDOOR UNIT Heating	High	43 dB	
	Medium	38 dB	
	Low	33 dB	
	Quiet	22 dB	
OUTDOOR UNIT	Cooling	45 dB	50 dB
	Heating	45 dB	50 dB

COMPRESSOR AND REFRIGERANT

COMPRESSOR TYPE		Hermetic type, 4 pole, 3 phase, DC inverter motor, Rotary	
DISCRIMINATION		5SS072XHA01	ASM89D10UFZ
WEIGHT (with oil)		6.0 kg	8.9 kg
PRECHARGED REFRIGERANT		700 g	850 g
REFRIGERANT TYPE		R410A	
FULL CHARGE Pipe length	15 m	700 g	850 g
	20 m	800 g	950 g
ADDITIONAL CHARGE		20 g/m	
MAXIMUM PIPING HEIGHT		15 m	

DIMENSIONS

INDOOR UNIT H x W x D	268 x 840 x 203 mm
OUTDOOR UNIT H x W x D	535 x 663 x 293 mm

WEIGHT

INDOOR UNIT Net / Shipping	8.5 kg / 10.5 kg	
OUTDOOR UNIT Net / Shipping	21 kg / 25 kg	26 / 30

DIMENSIONS

INDOOR UNIT

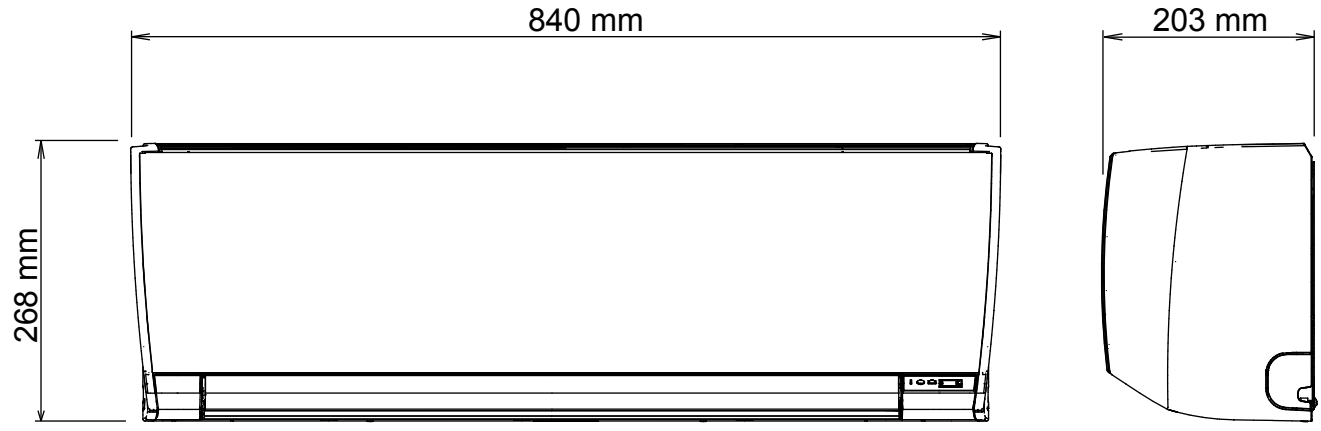

Drain hose

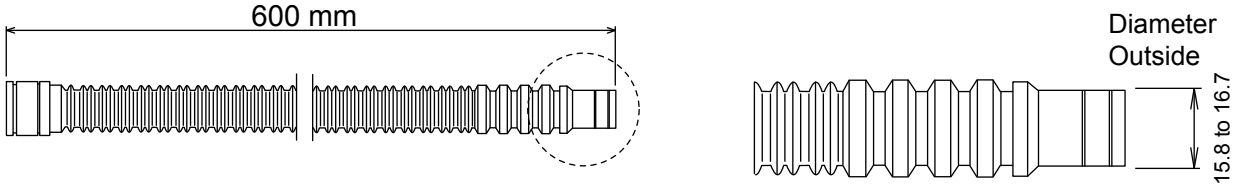

Inside : 13.8 mm

OUTDOOR UNIT

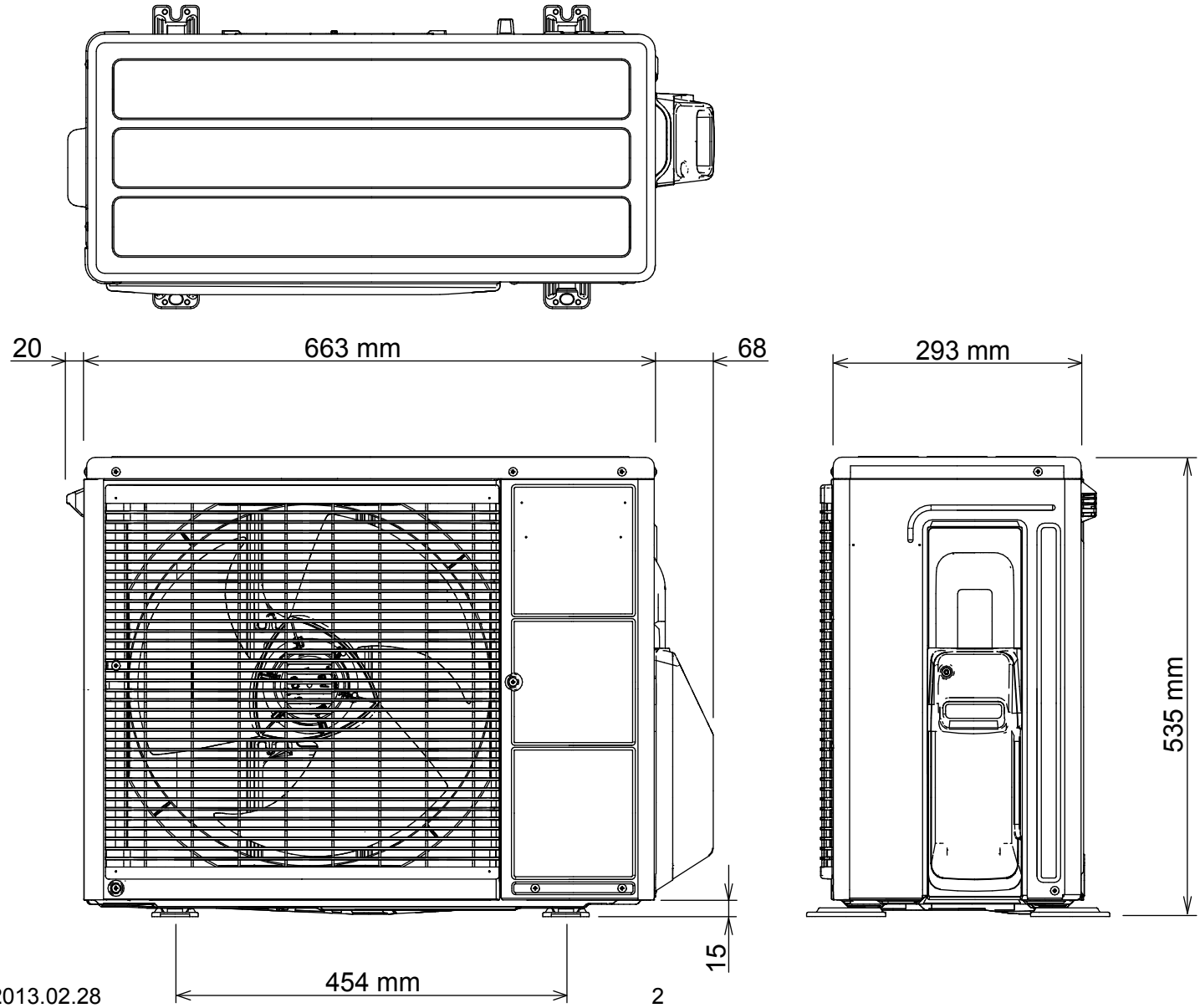

REFRIGERANT SYSTEM DIAGRAM

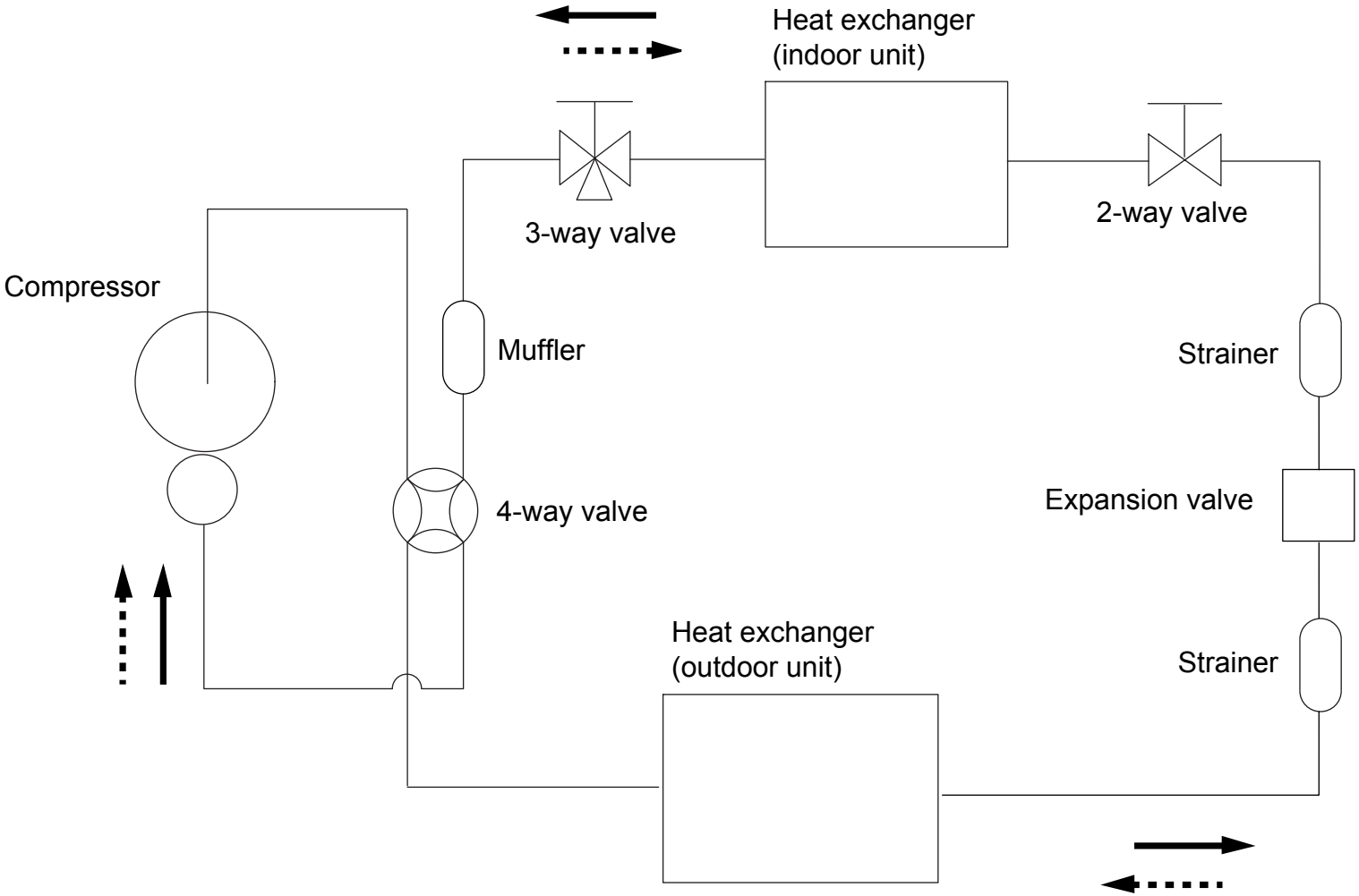

Refrigerant direction

Cooling

Heating

Refrigerant pipe diameter

Liquid : 1/4" (6.35 mm)

Gas : 3/8" (9.52 mm)

CIRCUIT DIAGRAM

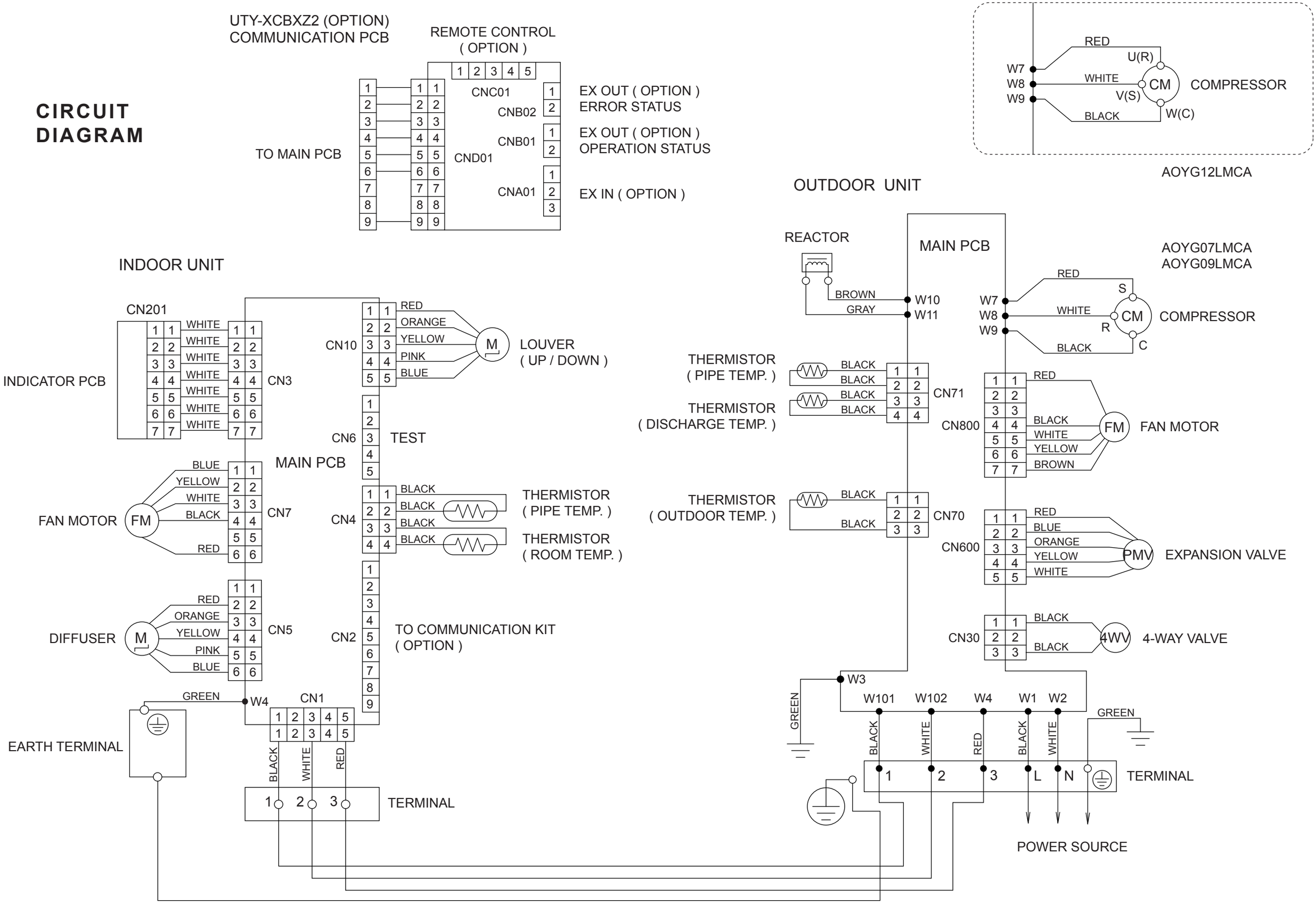

INDOOR PCB
CIRCUIT DIAGRAM

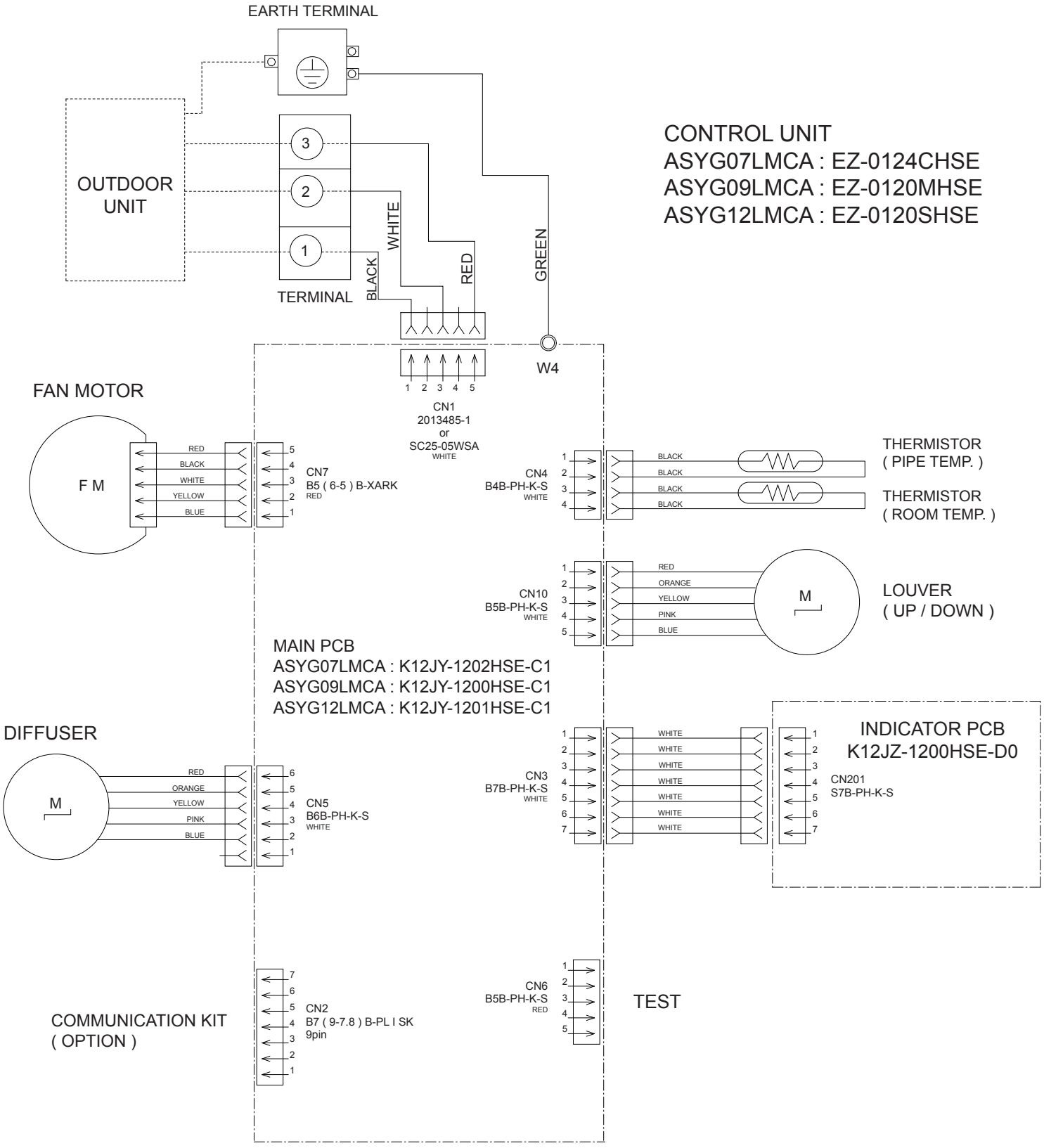

INDOOR UNIT
MAIN PCB
ASYG07LMCA : K12JY-1202HSE-C2
ASYG09LMCA : K12JY-1200HSE-C1
ASYG12LMCA : K12JY-1201HSE-C1

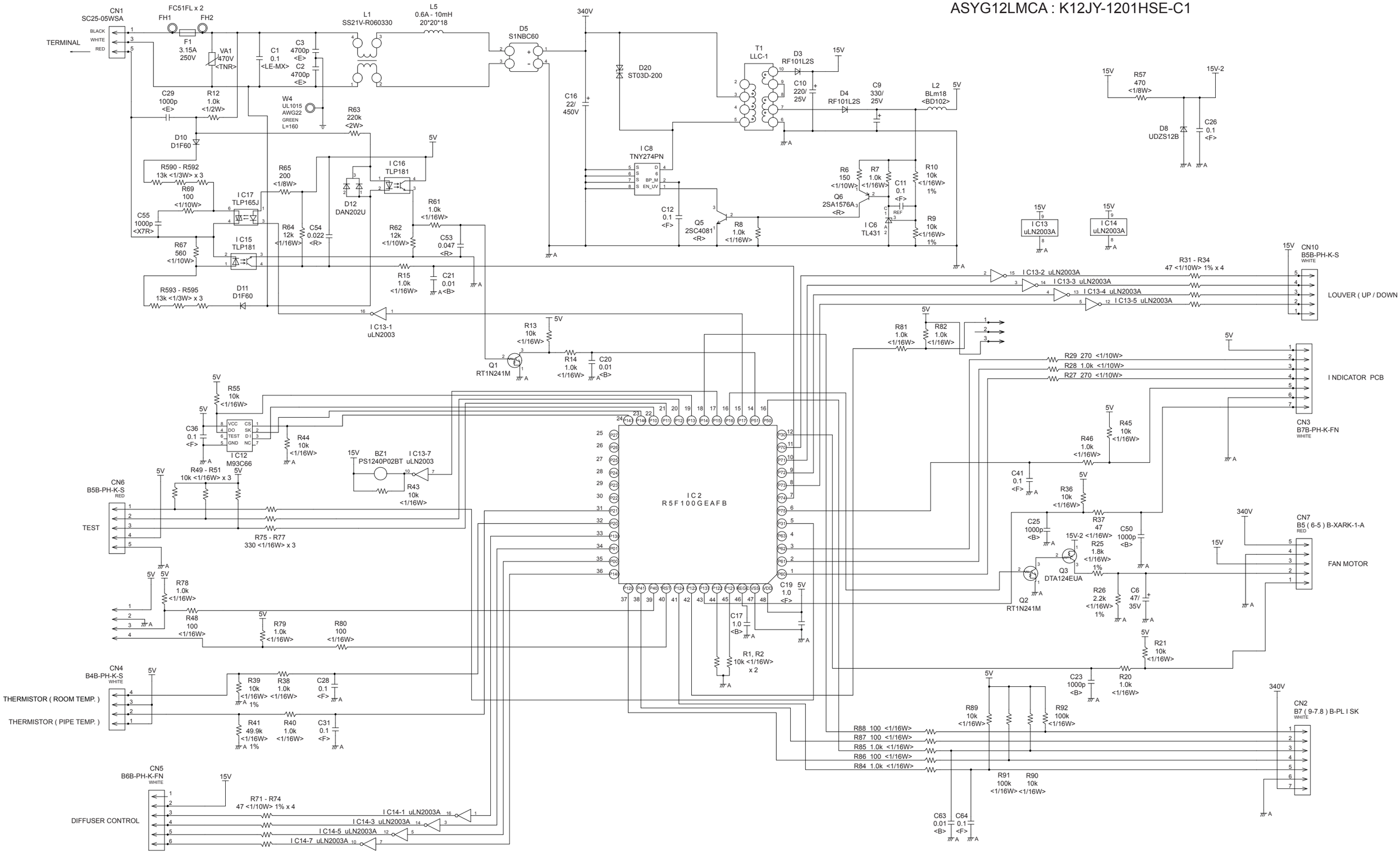

INDOOR UNIT
INDICATOR PCB
K12JZ-1200HSE-D0

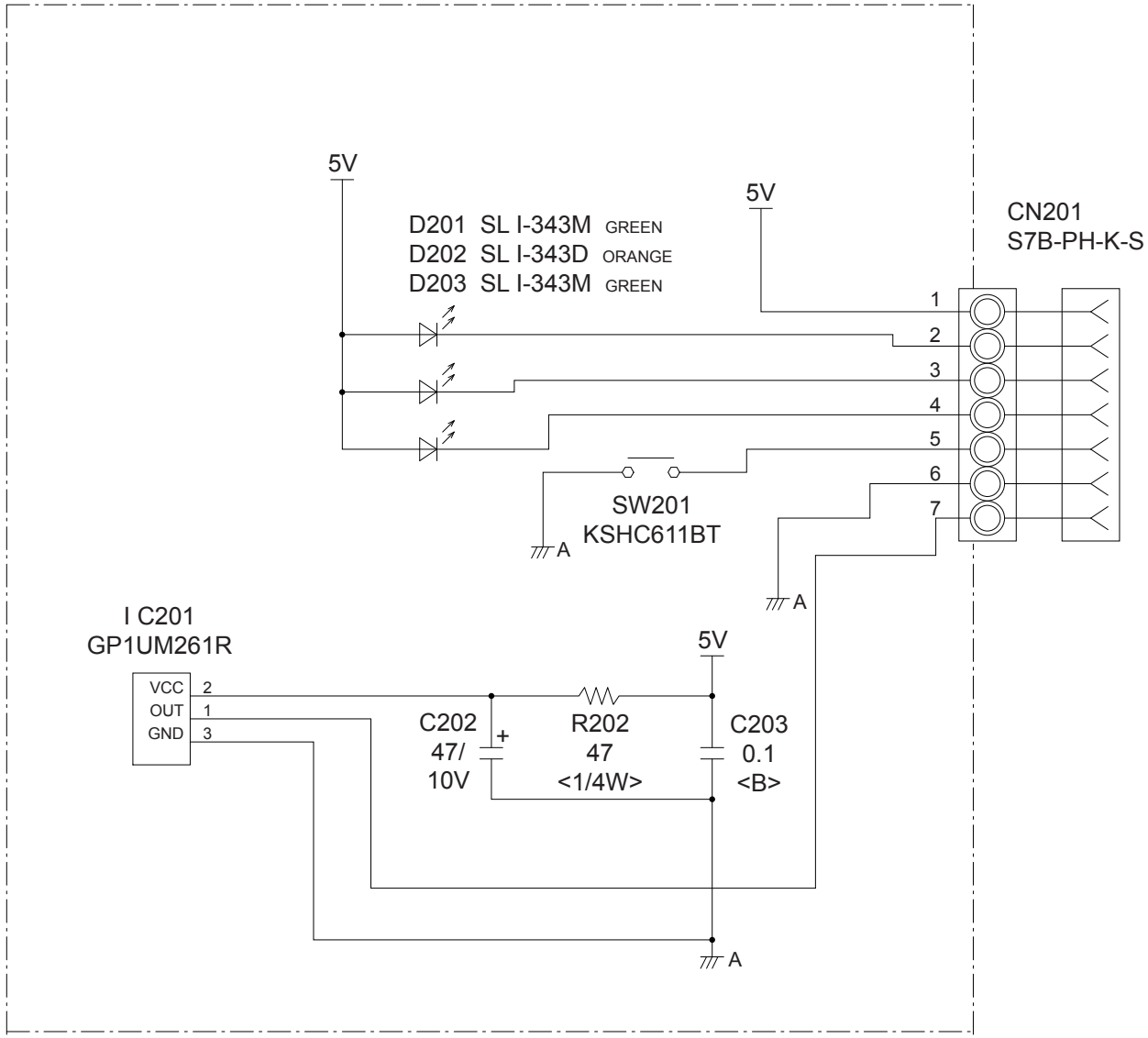

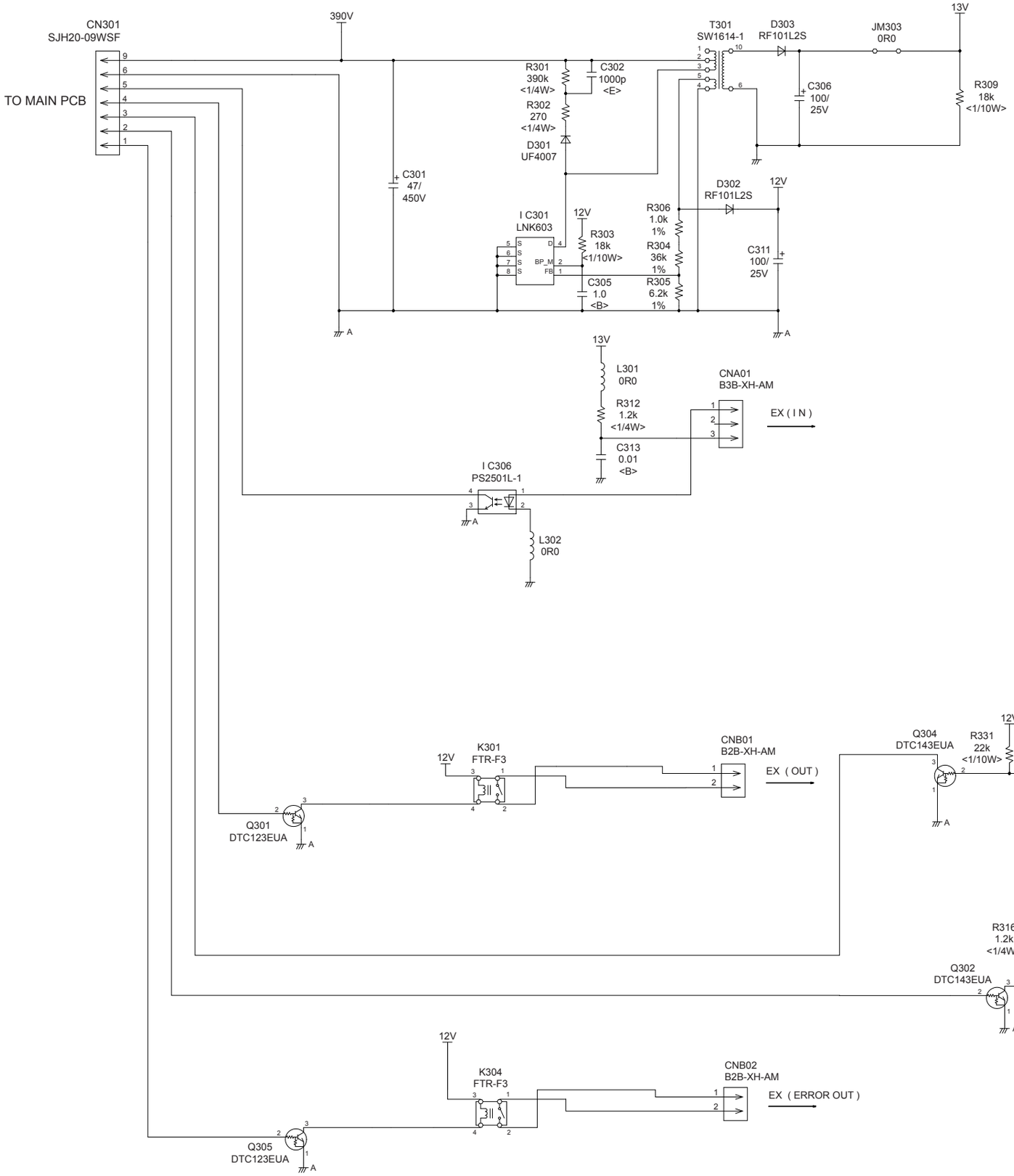

(Option)
Communication kit
UTY-XCBXZ2

Communication PCB
K10DC-1000HSE-CA0

OUTDOOR PCB
CIRCUIT DIAGRAM

INVERTER ASSEMBLY
AOYG07LMCA : EZ-0122CHUE
AOYG09LMCA : EZ-012PHUE
AOYG12LMCA : EZ-012RHUE

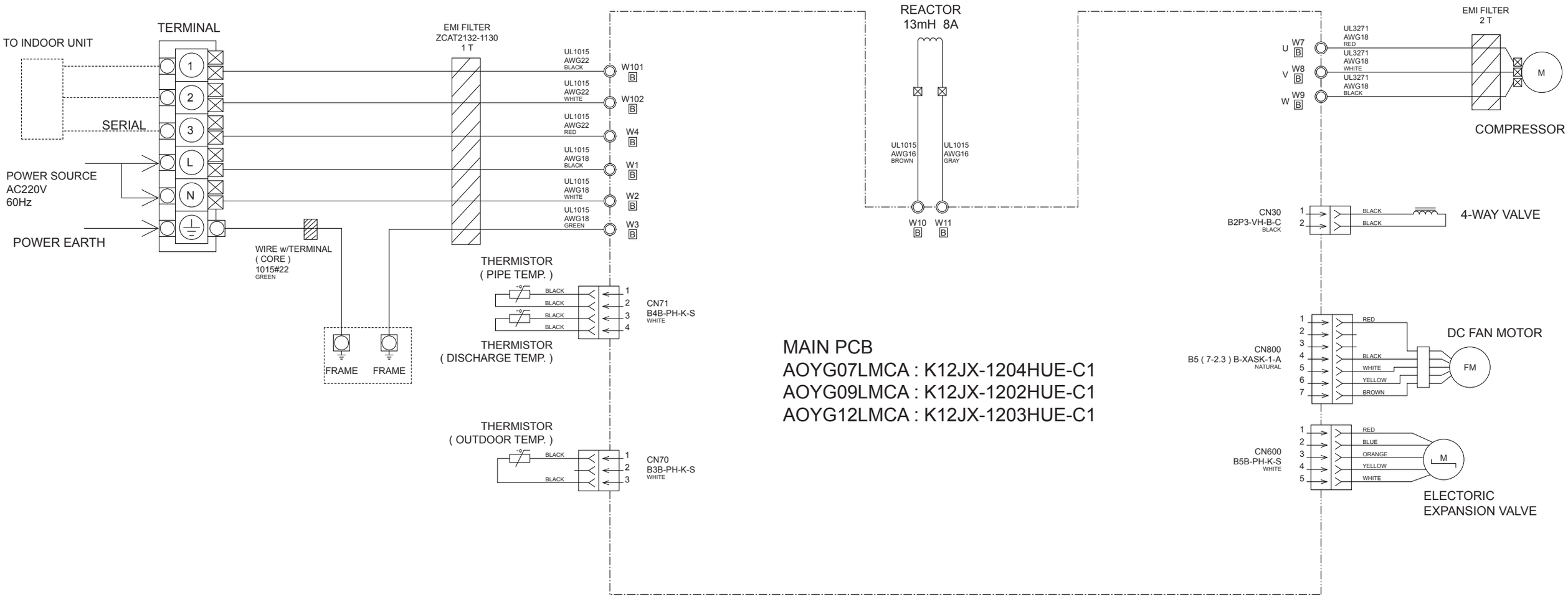

OUTDOOR UNIT
MAIN PCB
AOYG07LMCA : K12JX-1204HUE-C1
AOYG09LMCA : K12JX-1202HUE-C1
AOYG12LMCA : K12JX-1203HUE-C1

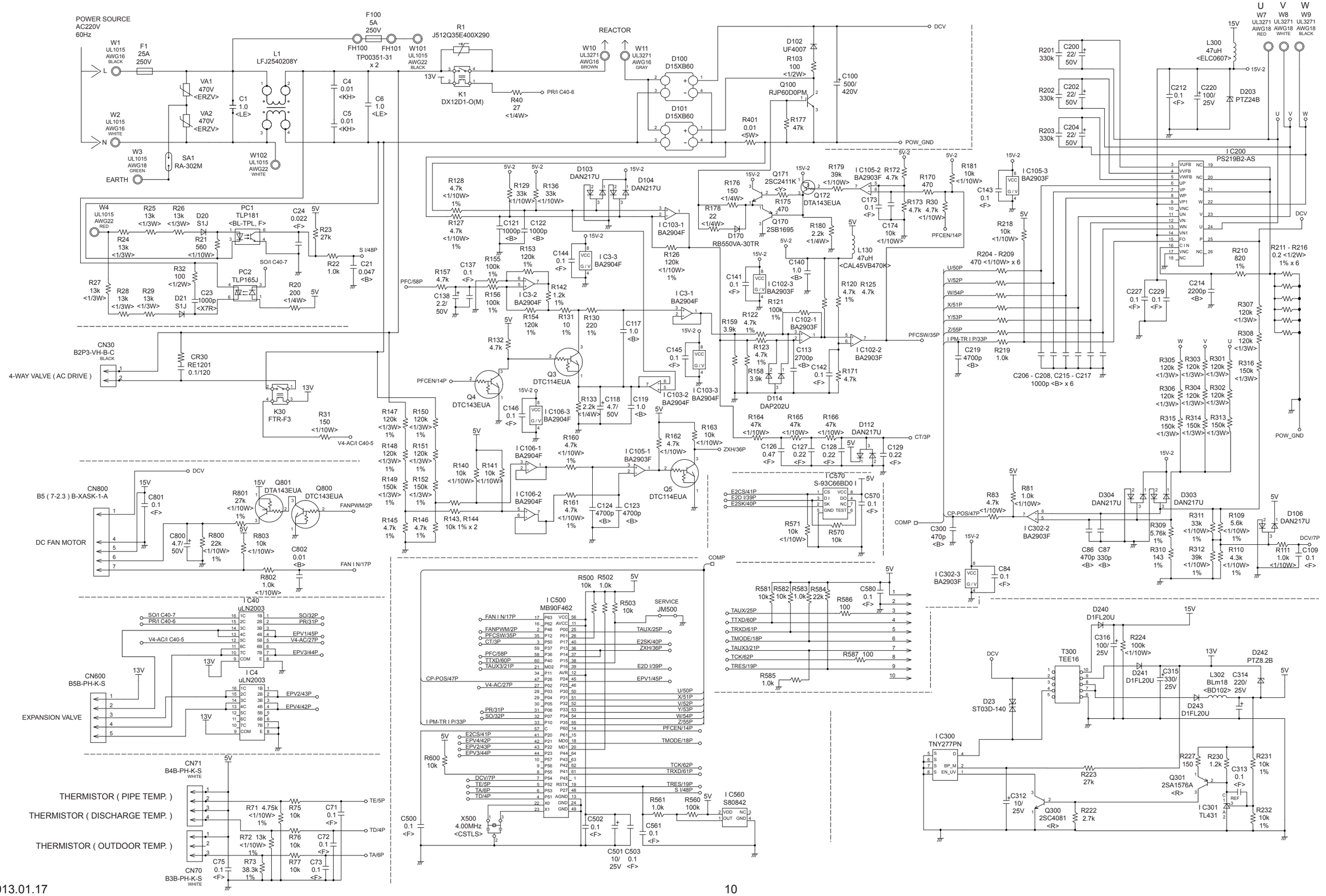

ERROR DETECTION

INDOOR UNIT
REMOTE CONTROL

If you use a wireless remote control, the lamp on the photo detector unit will output error codes by way of blinking patterns.
If you use a wired remote control, error codes will appear on the remote control display.
See the lamp blinking patterns and error codes in the table.
An error display is displayed only during operation.

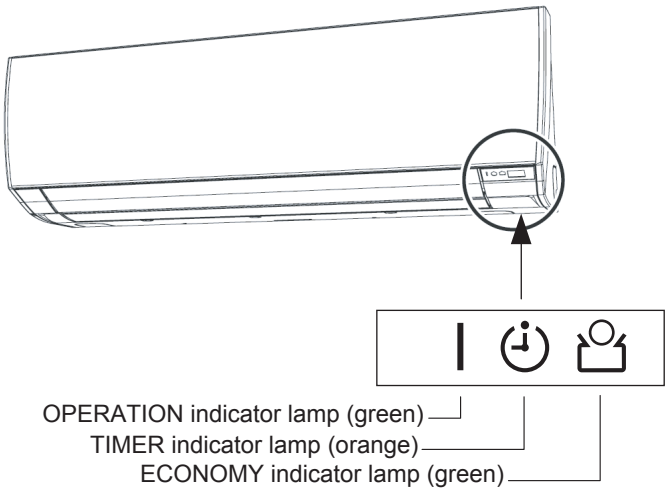

Wired remote control display (Option)
If an error occurs, the following display will be shown.
("Er" will appear in the set room temperature display.)

● : 0.5s ON / 0.5s OFF

◇ : 0.1s ON / 0.1s OFF

( ) : Number of flashing

Indoor unit lamps			Wired remote control	Description
OPERATION (green)	TIMER (orange)	ECONOMY (green)		
● (1)	● (1)	◇	11	Serial communication error
● (1)	● (2)	◇	12	Wired remote control communication error
● (1)	● (5)	◇	15	Check run unfinished
● (3)	● (2)	◇	32	Indoor unit PCB model information error
● (3)	● (5)	◇	35	Manual auto switch error
● (4)	● (1)	◇	41	Room temp. sensor error
● (4)	● (2)	◇	42	Indoor unit Heat Ex. Middle temp. sensor error
● (5)	● (1)	◇	51	Indoor unit fan motor error
● (5)	● (3)	◇	53	Drain pump error
● (5)	● (7)	◇	57	Damper error
● (5)	● (8)	◇	58	Intake grill error
● (5)	● (15)	◇	5U	Indoor unit error
● (6)	● (2)	◇	62	Outdoor unit main PCB model information error or communication error
● (6)	● (3)	◇	63	Inverter error
● (6)	● (4)	◇	64	Active filter error, PFC circuit error
● (6)	● (5)	◇	65	Trip terminal L error

Indoor unit lamps			Wired remote control	Description
OPERATION (green)	TIMER (orange)	ECONOMY (green)		
● (6)	● (10)	◇	6A	Display PCB microcomputers communication error
● (7)	● (1)	◇	71	Discharge temp. sensor error
● (7)	● (2)	◇	72	Compressor temp. sensor error
● (7)	● (3)	◇	73	Outdoor unit Heat Ex. liquid temp. sensor error
● (7)	● (4)	◇	74	Outdoor temp. sensor error
● (7)	● (5)	◇	75	Suction Gas temp. sensor error
● (7)	● (6)	◇	76	• 2-way valve temp. sensor error • 3-way valve temp. sensor error
● (7)	● (7)	◇	77	Heat sink temp. sensor error
● (8)	● (2)	◇	82	• Sub-cool Heat Ex. gas inlet temp. sensor error • Sub-cool Heat Ex. gas outlet temp. sensor error
● (8)	● (3)	◇	83	Liquid pipe temp. sensor error
● (8)	● (4)	◇	84	Current sensor error
● (8)	● (6)	◇	86	• Discharge pressure sensor error • Suction pressure sensor error • High pressure switch error
● (9)	● (4)	◇	94	Trip detection
● (9)	● (5)	◇	95	Compressor rotor position detection error (permanent stop)
● (9)	● (7)	◇	97	Outdoor unit fan motor error
● (9)	● (9)	◇	99	4-way valve error
● (10)	● (1)	◇	A1	Discharge temp. error
● (10)	● (3)	◇	A3	Compressor temp. error
● (10)	● (4)	◇	A4	High pressure error
● (10)	● (5)	◇	A5	Low pressure error
● (13)	● (2)	◇	J2	Branch boxes error

PARTS

INDOOR UNIT

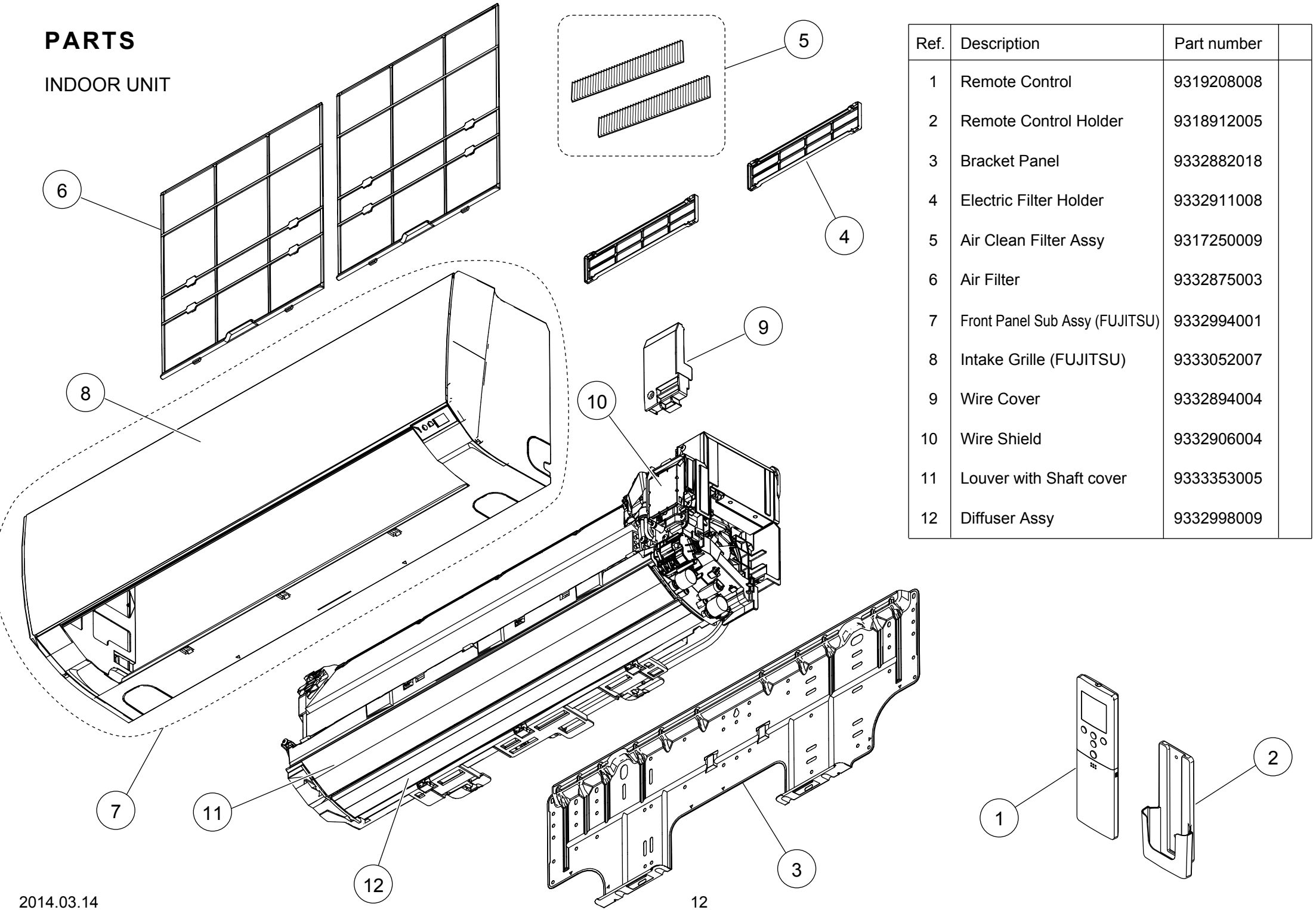

Ref.	Description	Part number	
1	Remote Control	9319208008	
2	Remote Control Holder	9318912005	
3	Bracket Panel	9332882018	
4	Electric Filter Holder	9332911008	
5	Air Clean Filter Assy	9317250009	
6	Air Filter	9332875003	
7	Front Panel Sub Assy (FUJITSU)	9332994001	
8	Intake Grille (FUJITSU)	9333052007	
9	Wire Cover	9332894004	
10	Wire Shield	9332906004	
11	Louver with Shaft cover	9333353005	
12	Diffuser Assy	9332998009	

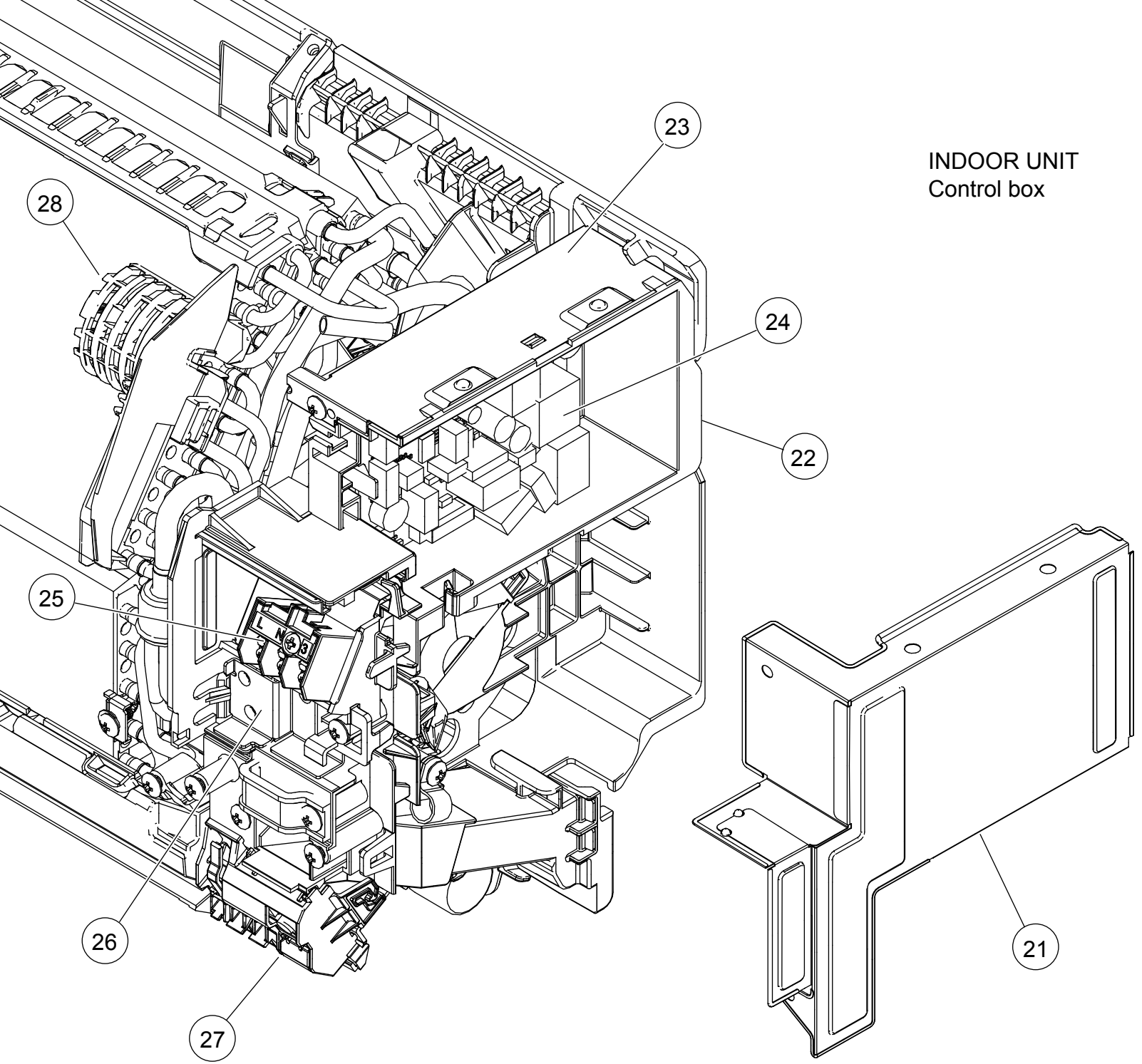

INDOOR UNIT
Control box

Ref.	Description	Part number	
21	Cover Shield	9332915006	
22	Control Box	9332892000	
23	Box Shield Assy	9332877007	
24	Main PCB (07)	9709427033	
24	Main PCB (09)	9709427019	
24	Main PCB (12)	9709427026	
25	Terminal	9900720001	
26	Earth Terminal	9332880007	
27	Display Assy	9709430019	
28	Room Thermistor Holder	9332868005	
--	Thermistor Assy	9900714024	

INDOOR UNIT
Evaporator
Fan

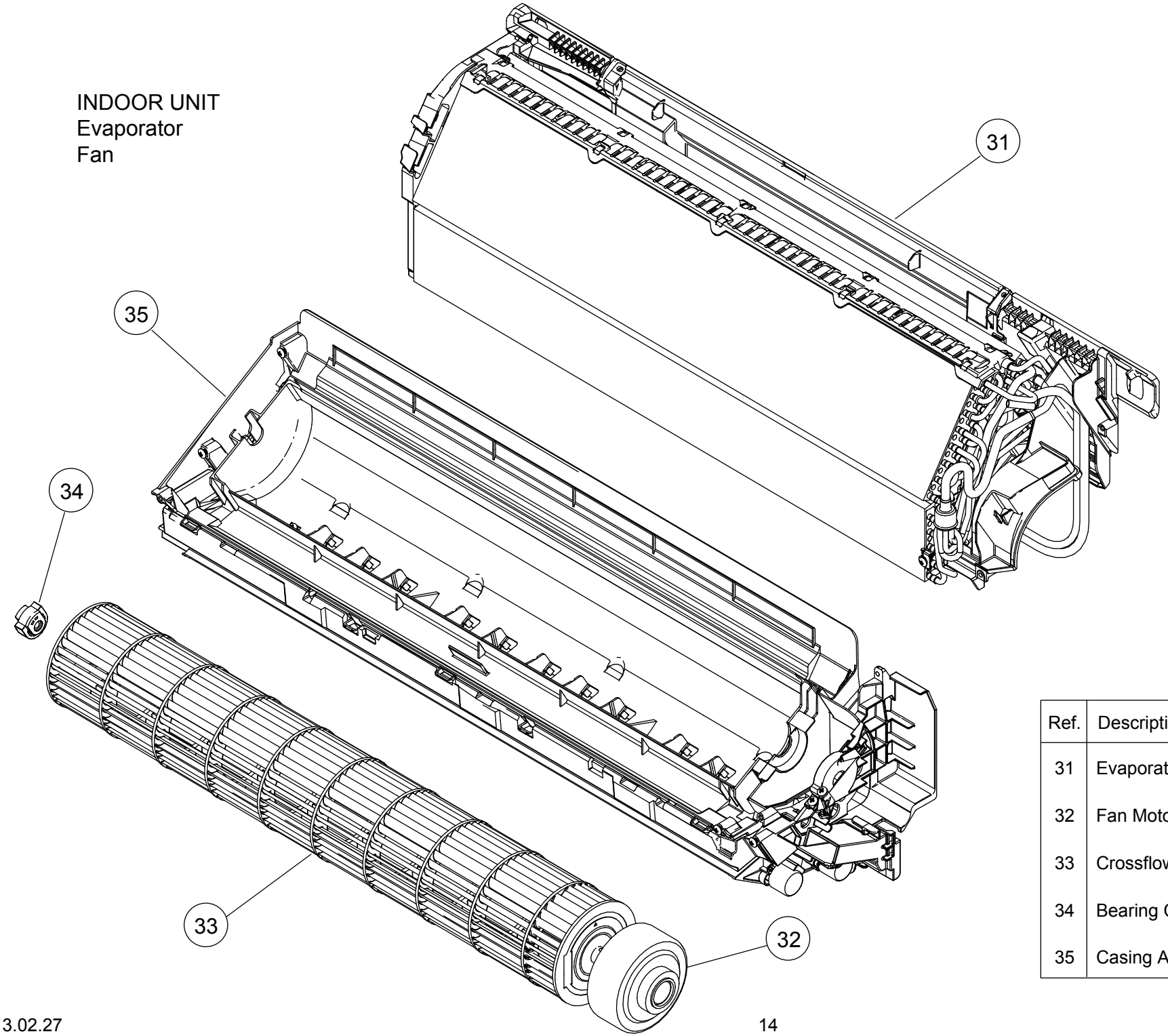

Ref.	Description	Part number	
31	Evaporator Total Assy	9332989007	
32	Fan Motor	9603269005	
33	Crossflow Fan Assy	9316830004	
34	Bearing C Assy	9306628017	
35	Casing Assy	9333009001	

INDOOR UNIT
Casing assy

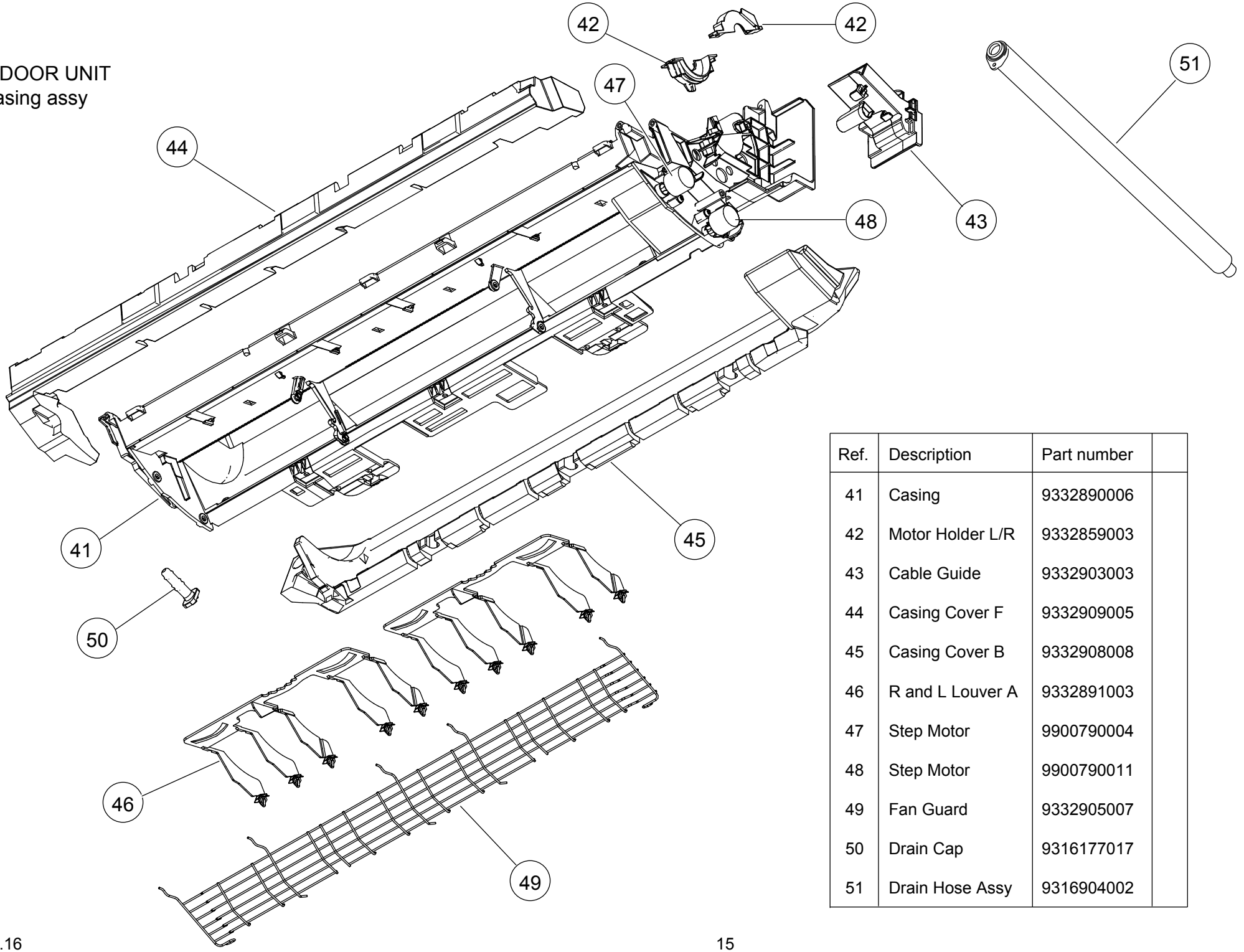

Ref.	Description	Part number	
41	Casing	9332890006	
42	Motor Holder L/R	9332859003	
43	Cable Guide	9332903003	
44	Casing Cover F	9332909005	
45	Casing Cover B	9332908008	
46	R and L Louver A	9332891003	
47	Step Motor	9900790004	
48	Step Motor	9900790011	
49	Fan Guard	9332905007	
50	Drain Cap	9316177017	
51	Drain Hose Assy	9316904002	

PARTS

OUTDOOR UNIT

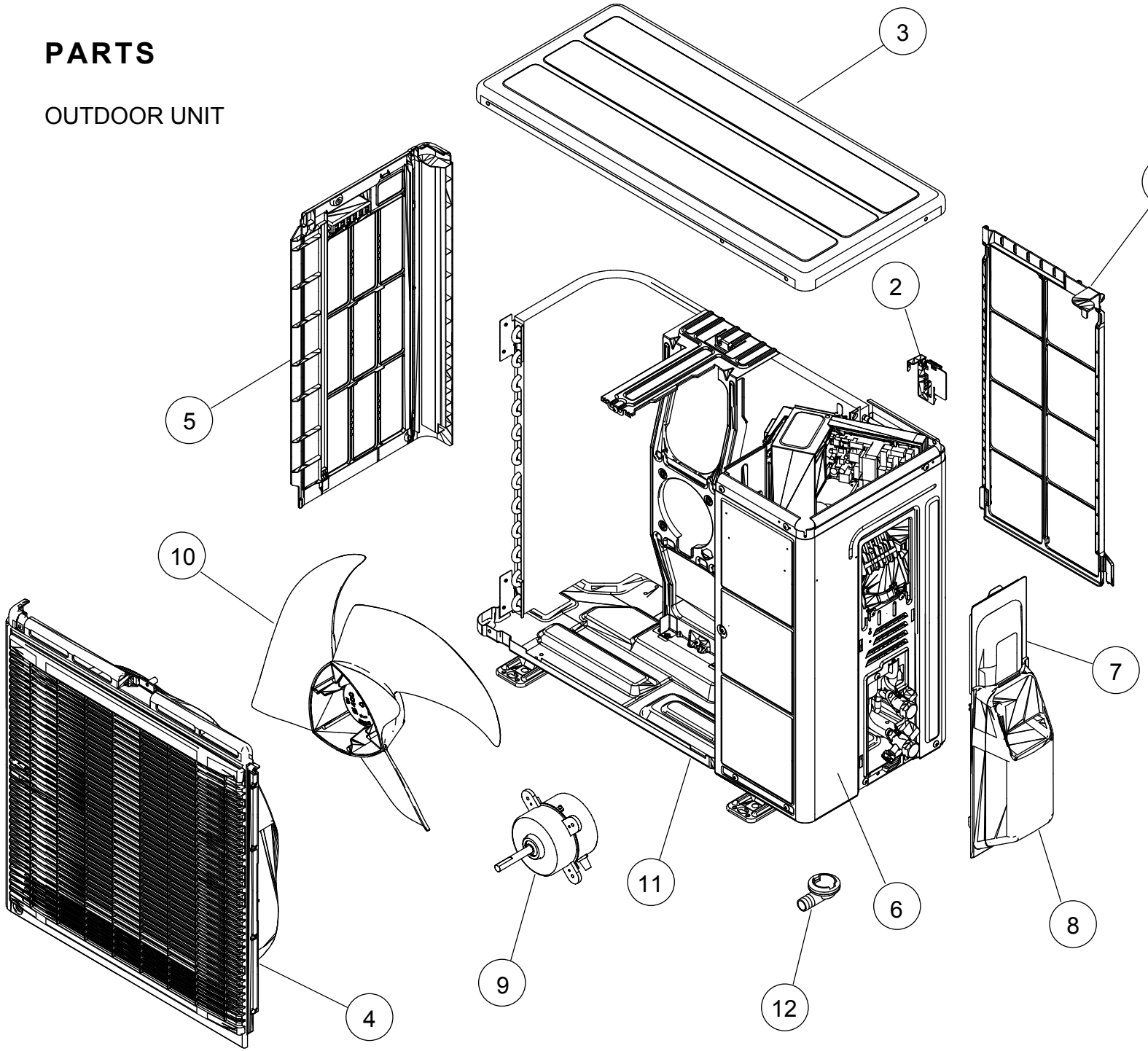

Ref.	Description	Part number	
1	Protective Net	9332855005	
2	Thermistor Holder	9332505009	
3	Top Panel Assy	9332977004	
4	Front Panel Assy	9332965001	
5	Cabinet Left Assy	9332962000	
6	Cabinet Right Assy	9332963007	
7	Switch Cover A Assy	9332964004	
8	Switch Cover B	9332843002	
9	Fan Motor	9603074012	
10	Propeller Fan	9309909014	
11	Base Assy (07, 09)	9332888003	
11	Base Assy (12)	9332888010	
12	Drain Assy	9332574005	
--	Emblem	9319151007	

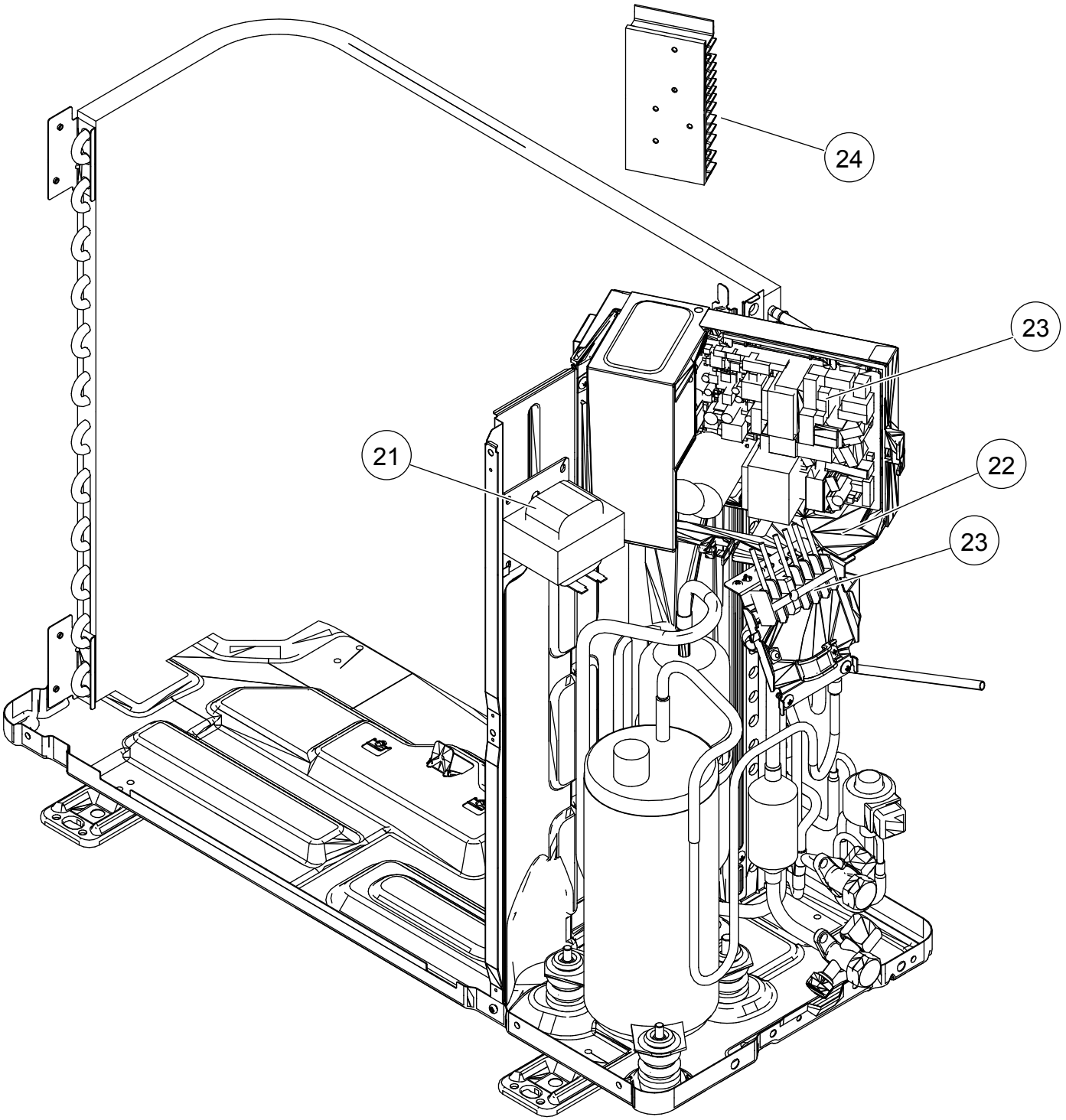

OUTDOOR UNIT

Ref.	Description	Part number	
21	Reactor Assy	9900787028	
22	PCB Holder	9332506006	
23	Main PCB with Terminal (07)	9709435052	
23	Main PCB with Terminal (09)	9709435038	
23	Main PCB with Terminal (12)	9709435045	
24	Heat Sink B	9332522006	
--	Thermistor Assy	9900719029	
--	Thermistor	9900717025	

OUTDOOR UNIT
AOYG07LMCA
AOYG09LMCA

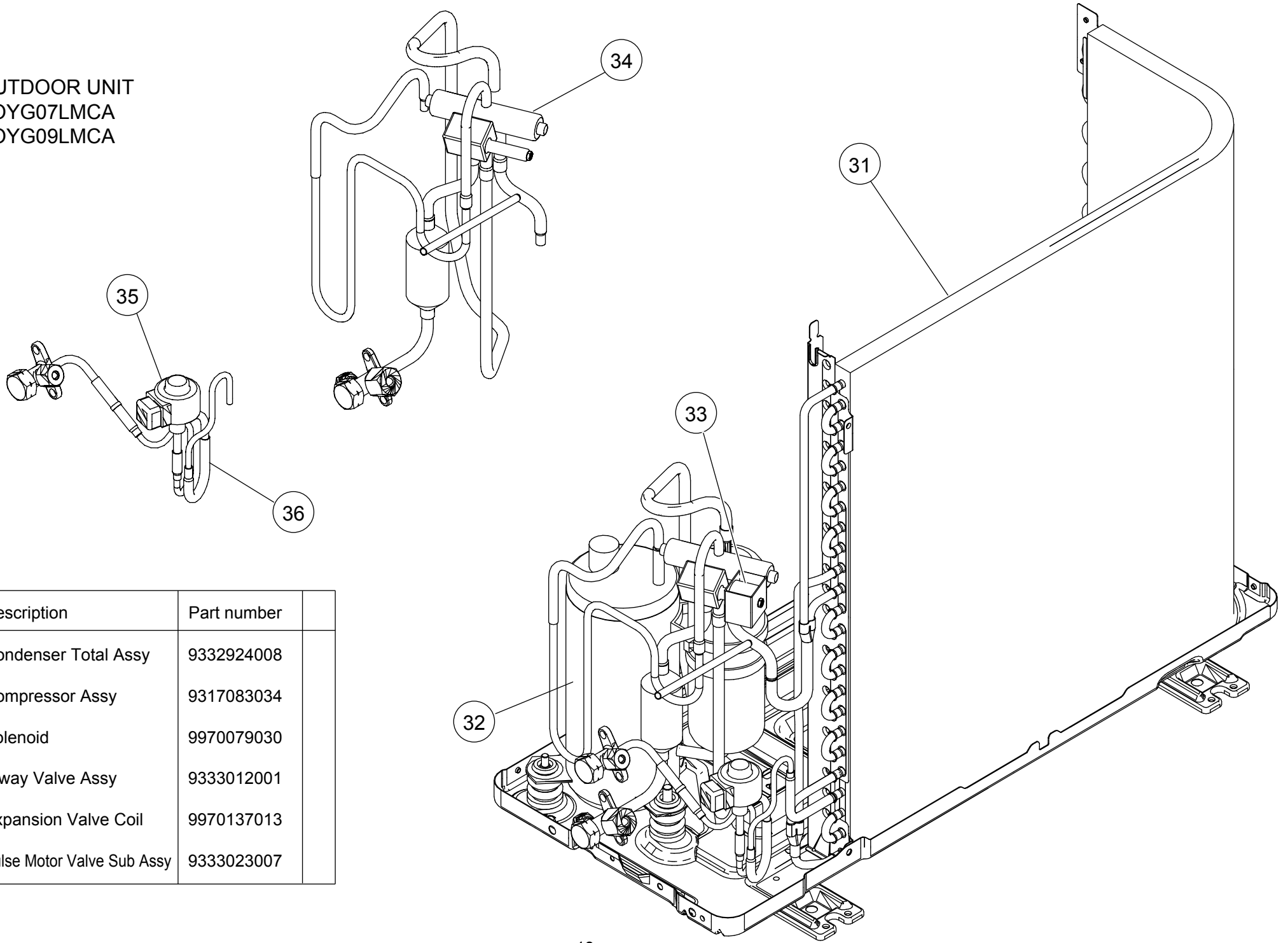

Ref.	Description	Part number	
31	Condenser Total Assy	9332924008	
32	Compressor Assy	9317083034	
33	Solenoid	9970079030	
34	4-way Valve Assy	9333012001	
35	Expansion Valve Coil	9970137013	
36	Pulse Motor Valve Sub Assy	9333023007	

OUTDOOR UNIT
AOYG12LMCA

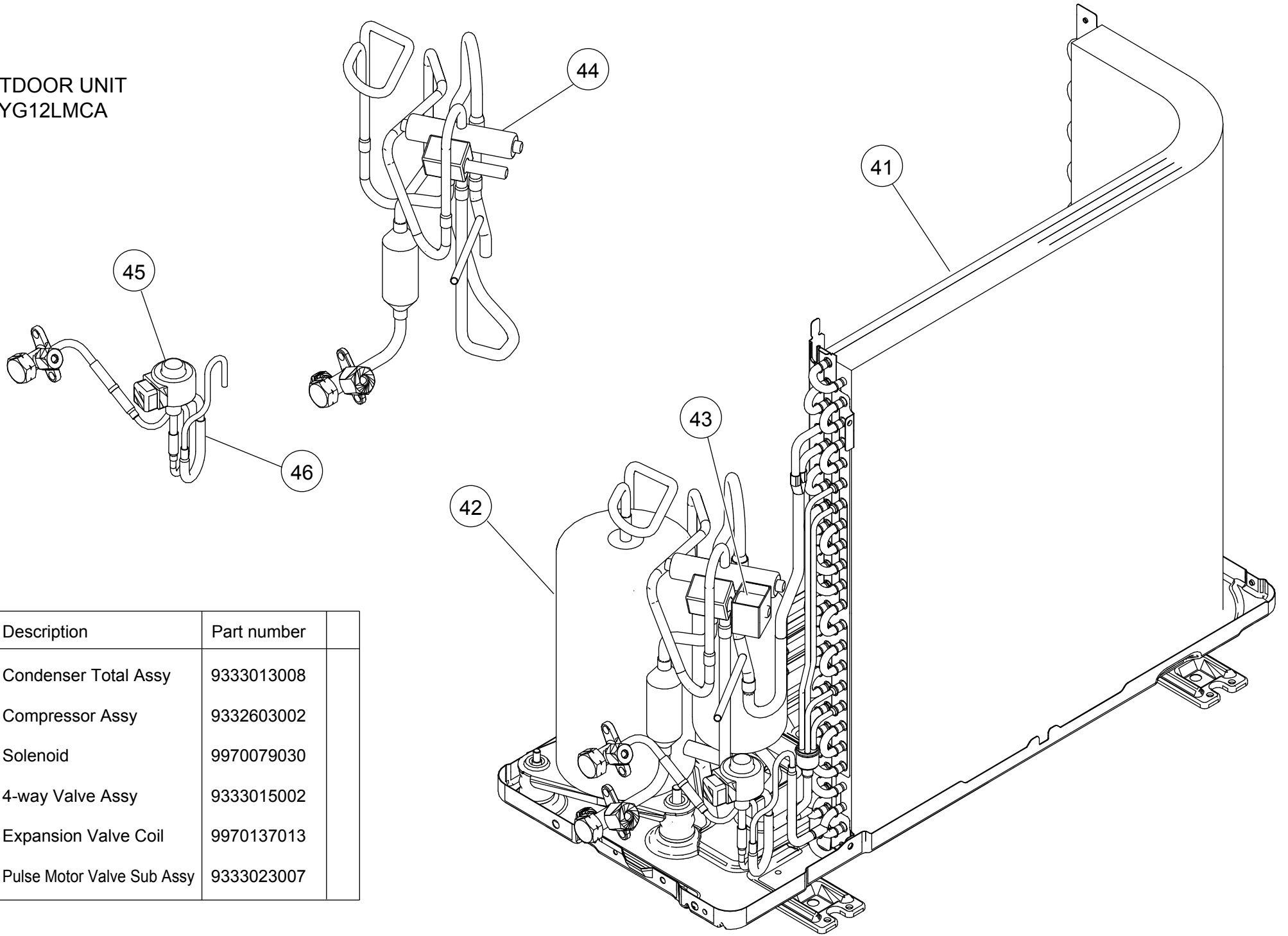

Ref.	Description	Part number	
41	Condenser Total Assy	9333013008	
42	Compressor Assy	9332603002	
43	Solenoid	9970079030	
44	4-way Valve Assy	9333015002	
45	Expansion Valve Coil	9970137013	
46	Pulse Motor Valve Sub Assy	9333023007	

ACCESSORIES

INDOOR UNIT

Name and Shape	Part number
Bracket Panel 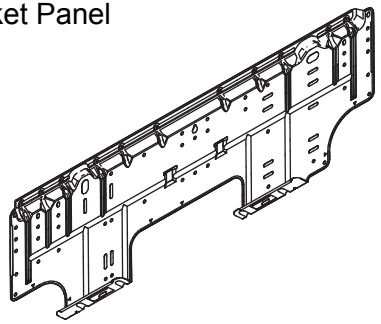	9332882018
Remote Control 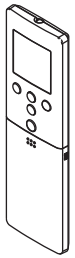	9319208008
Remote Control Holder 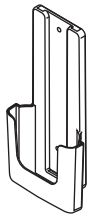	9318912005
Battery (penlight)	0600185541

Name and Shape	Part number
Cloth tape 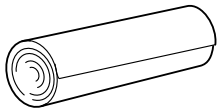	9310519004
Tapping screw (M4 x 25 mm) 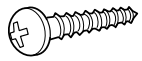	0700076046
Tapping screw (M3 x 12 mm) 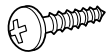	0700019036
Air cleaning filter assy 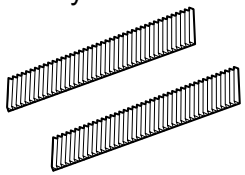	9317250009
Filter holder 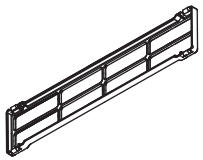	9332911008

OPTIONAL PARTS

Name and Shape	
Wired remote control UTY-RVNYM 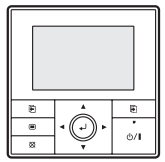	
Wired remote control UTY-RNNYM 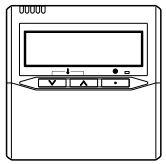	
Simple remote Control UTY-RSNYM	
External connect kit UTY-XWZXZ5	
Communication kit UTY-XCBXZ2 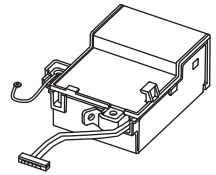	

OUTDOOR UNIT

Name and Shape	Part number
Drain pipe assy 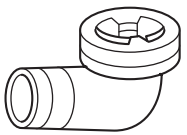	9332574005

1302G4184