Refrigerant R410A

INVERTER

AIR CONDITIONER

Duct type

DESIGN & TECHNICAL DATA

INDOOR

AR∗G30LMLE
AR∗G36LMLE

OUTDOOR

AO∗G30LETL
AO∗G36LETL

FUJITSU GENERAL LIMITED

1. INDOOR UNIT

DUCT TYPE :

AR∗G30LMLE
AR∗G36LMLE

DTR_AR064E_01
2013.02.28

DUCT TYPE
AR✱G30-36LMLE

CONTENTS

1. INDOOR UNIT

1. FEATURES

■ MODELS

AR∗G30LMLE / AO∗G30LETL
AR∗G36LMLE / AO∗G36LETL

■ FEATURES

● Energy efficiency class

	MODEL	
	AR∗G30LMLE	AR∗G36LMLE
Cooling	A+	A+
Heating	A	A

● Installation styles

Embedded in Ceiling

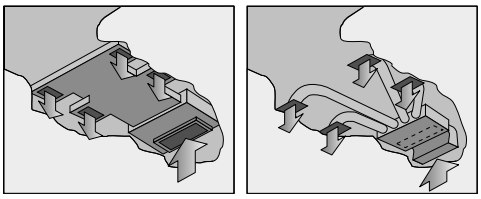

Hanging from Ceiling

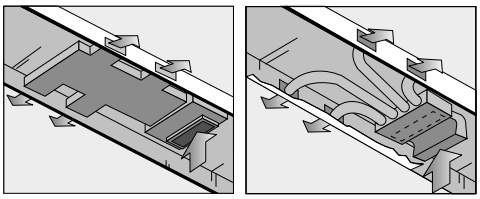

● Slim & compact design

In the case of bottom suction type, as seen from lower rear part.

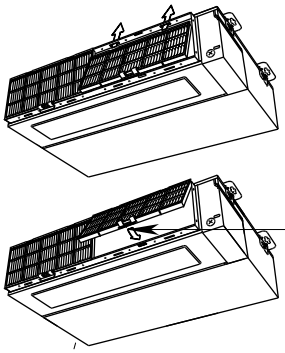

Control Box united with main unit

One-touch operating and easy-to-install
long-life filter (optional)

In addition to the slim height of 270 mm, further compactification is attained by reducing 65 mm from the width with the flanking control box embedded inside the chassis.

DUCT TYPE
AR✱G30-36LMLE

● Easy maintenance

In the case of rear suction type, as seen from lower rear part.

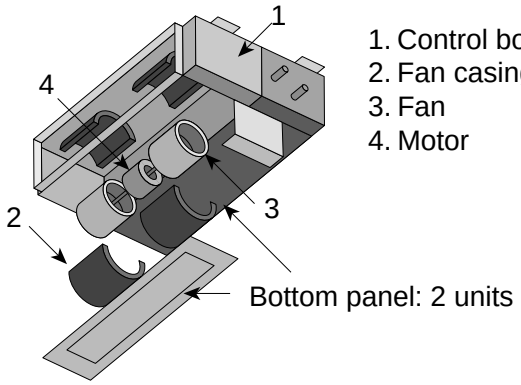

1. Control box
2. Fan casing
3. Fan
4. Motor

The motor and fan maintenance and dismounting can be made easily by removing the rear panel and lower part of the casing with the main chassis installed.

● Quiet operation

Quiet operation at 26dB(A) is possible in quiet mode.

● Economy operation

The power consumption can be reduced.

■ FUNCTION SETTING

● Static pressure mode setting

Air flow, noise, etc. can be used under the optimum conditions by selecting the static pressure mode matched to the installation conditions.

● Room temperature adjustment correction

Suitable room temperature control is performed by changing the room temperature correction value by simple remote control operation to match the conditions under which the air conditioner is installed.

● Auto restart

The units restart automatically when the current was returned even when there was a power interruption during operation.

2. WIRED REMOTE CONTROLLER

■ FEATURES

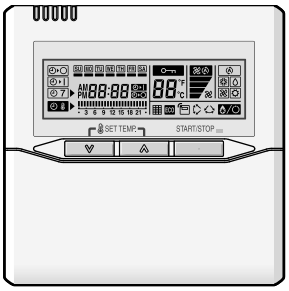

- ✱ Various timer setup (ON / OFF / WEEKLY) are possible.
- ✱ Equipped with weekly timer as standard function.(2 times Start / Stop per day for a week)
- ✱ When setting up a timer, operation mode and a temperature setup can be changed.
- ✱ When a failure occurs, the error code is displayed. (Maximum of 16)
- ✱ Error indication.(A maximum of 16 error histories are memorizable.)
- ✱ Up to 16 indoor units can be simultaneously controlled.
- ✱ The room temperature can be controlled by being detected the temperature accurately with built-in thermo sensor.

● Simple function setting

Setting of the air conditioner selection function is performed by remote controller.

● High performance and compact size

Three functions are combined in one unit.

● Built-in timers

Weekly timer

Possible to set ON/OFF time to operate twice each day of the week.

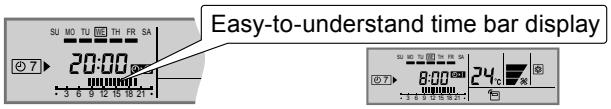

Setup screen example
(Set to Wednesday: 8:00 to 20:00.)

Screen after setup

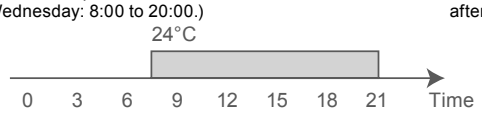

Setback timer

Possible to set temperature for two time spans and for each day of the week.

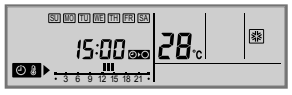

Setup screen example
(Set from Sunday to Saturday: 12:00 to 15:00, 28 °C.)

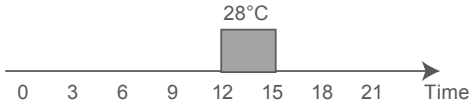

At "Weekly timer" + "Set back timer" setup

24°C →28°C→24°C

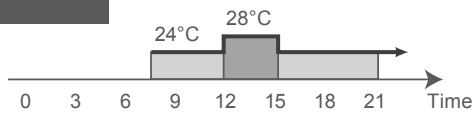

● Easy-to-understand operation

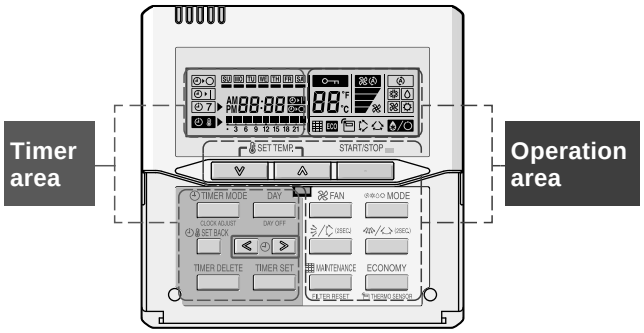

[Variable timer control]

The operation/display sections are zoned according to time and operation, enabling variable programming to match application.

● Simple installation

Components are compatible with standard switch boxes. Flat back construction allows equipment to be installed wherever it is needed.

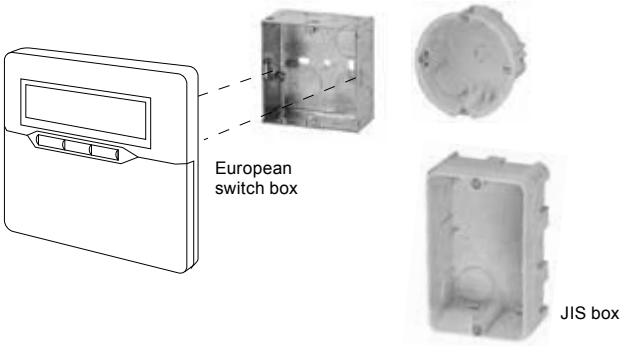

DUCT TYPE
AR✱G30-36LMLE

■ FUNCTIONS

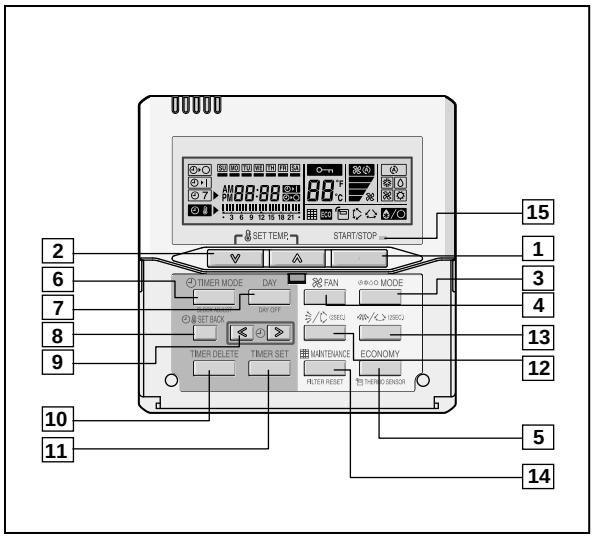

Display panel

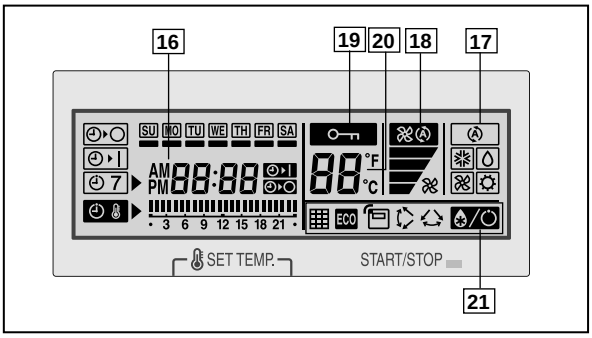

1 START/STOP button
Pressed to start and stop operation.

2 SET TEMP. button
Selects the setting temperature.

3 MODE button
Selects the operating mode (AUTO, HEAT, FAN, COOL, DRY).

4 FAN button
Selects the fan speed (AUTO, QUIET, LOW, MED, HIGH).

5 ECONOMY button
Turns the economy efficient mode on and off.

6 TIMER MODE (CLOCK ADJUST) button
Selects the timer mode (OFF TIMER, ON TIMER, WEEKLY TIMER). Set the current time.

7 DAY (DAY OFF) button
Temporarily cancels of one day timer.

8 SET BACK button
Pressed to select the set back timer.

9 Set time button
Pressed to set time.

10 TIMER DELETE button
The schedule of a weekly timer is deleted.

11 TIMER SET button
Sets the date, hour, minute and on-off time.

12 Vertical airflow direction and swing button
Push for two seconds to change the swing mode.

13 Horizontal airflow direction and swing button
Push for two seconds to change the swing mode.

14 FILTER RESET button

15 Operation lamp
Lights during operation and when the timer is on.

16 Timer and clock display

17 Operation mode display

18 Fan speed display

19 Operation lock display

20 Temperature display

21 Function display
- Defrost display
- Thermo sensor display
- Economy display
- Vertical swing display
- Horizontal swing display
- Filter display

Functions will be different due to type of indoor unit.For details please see operation manual.

■ DIMENSION

[Unit : mm]

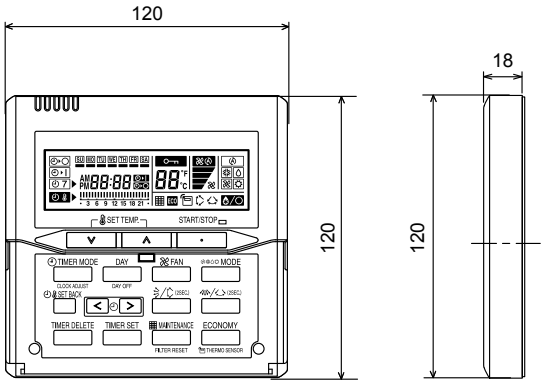

Front View

Side View

■ SPECIFICATION

SIZE (H x W x D mm)	120 x 120 x 18
WEIGHT (g)	160
CABLE LENGTH (m)	10
POWER (V)	12

■ WIRING SPECIFICATIONS

Use	Size	Wire type	Remarks
Remote controller cable	0.33mm^2 (22 AWG)	Polar 3 core	Use sheathed PVC cable

3. SPECIFICATIONS

Type					DUCTED MODEL	
					INVERTER HEATPUMP	
Model name					AR∗G30LMLE	AR∗G36LMLE
Power source					230V ~ 50Hz	
Available voltage range					198-264V ~ 50Hz	
Capacity	Cooling	Rated		kW	8.50	9.40
				Btu/h	29000	32100
		Min-Max		kW	2.80 -10.00	2.80 -11.20
				Btu/h	9500 -34100	9500 -38200
	Heating	Rated		kW	10.00	11.20
				Btu/h	34100	38200
		Min-Max		kW	2.70 -11.20	2.70 -12.70
				Btu/h	9200 -38200	9200 -43300
Input power	Cooling	Rated		kW	2.65	2.96
		Max.			3.88	4.22
	Heating	Rated			2.68	3.10
		Max.			3.88	4.56
Current	Cooling	Rated		A	11.6	13.0
	Heating	Rated			11.7	13.6
EER		Cooling		kW/kW	3.21	3.18
COP		Heating			3.73	3.61
Moisture removal				l/h (pints/h)	2.5(5.3)	3.0 (6.3)
Maximum operating current *		Cooling		A	17.0	18.5
		Heating			17.0	20.0
Fan	Airflow rate	Cooling	High	m^3/h	1900	
			Med		1620	
			Low		1270	
			Quiet		980	
		Heating	High		2100	
			Med		1620	
			Low		1270	
			Quiet		980	
	Type × Q'ty				Sirocco × 2	
	Motor output			W	197	
Recommended static pressure				Pa	30 to 150	
Sound pressure level		Cooling	High	dB(A)	39	
			Med		35	
			Low		30	
			Quiet		26	
		Heating	High		42	
			Med		35	
			Low		30	
			Quiet		26	
Heat exchanger type		Dimensions (H × W × D)		mm	294 × 1000 × 39.9	
		Fin pitch			1.40	
		Rows x Stages			3 × 14	
		Pipe type			Copper	
		Fin type			Aluminium	
Enclosure		Material			Steel	
		Colour			-	
Dimensions (H×W ×D)	Net			mm	270 × 1135 × 700	
	Gross				300 × 1320 × 790	
Weight	Net			kg	40	
	Gross				47	
Connection pipe	Size	Liquid		mm	Ø 9.52 (Ø 3/8 in.)	
		Gas			Ø 15.88 (Ø 5/8 in.)	
	Method				Flare	
Operation range		Cooling		°C	18 to 32	
				%RH	80 or less	
		Heating		°C	16 to 30	
Remote controller type					Wired	
Drain port	Material				Steel	
	Size			mm	Ø35.7 (I.D.), Ø38.1 (O.D.)	

Note :
Specifications are based on the following conditions.
Cooling : Indoor temperature of 27°CDB/19°CWB. and outdoor temperature of 35°CDB/24°CWB.
Heating : Indoor temperature of 20°CDB/15°CWB. and outdoor temperature of 7°CDB/6°CWB.
Standard static pressure : 47 Pa
Pipe length : 5 m, Height difference : 0 m.(Outdoor unit - Indoor unit)
Sound pressure level : Install a 2m duct to the outlet port and a 1m duct to the suction poit and measure.
The protective function might work when using outside the operation range.
*: The maximum current is the maximum value when operated within the operation range.

DUCT TYPE
AR∗G30-36LMLE

Model name				AR∗G30LMLE	AR∗G36LMLE
Energy efficiency class	Cooling			A+	A+
	Heating (Average)			A	A
Pdesign	Cooling		kW	8.5 (35°C)	9.4 (35°C)
	Heating (Average)			8.0 (-10°C)	8.7 (-10°C)
SEER	Cooling		kWh/kWh	5.90	5.70
SCOP	Heating (Average)			3.90	3.80
Annual energy consumption	QCE		kWh/a	504	576
	QHE (Average)			2868	3202
Sound power level	Cooling	High	dB (A)	65	65
	Heating			69	70

4. DIMENSIONS

■ MODEL: AR∗G30LMLE, AR∗G36LMLE

(Unit : mm)

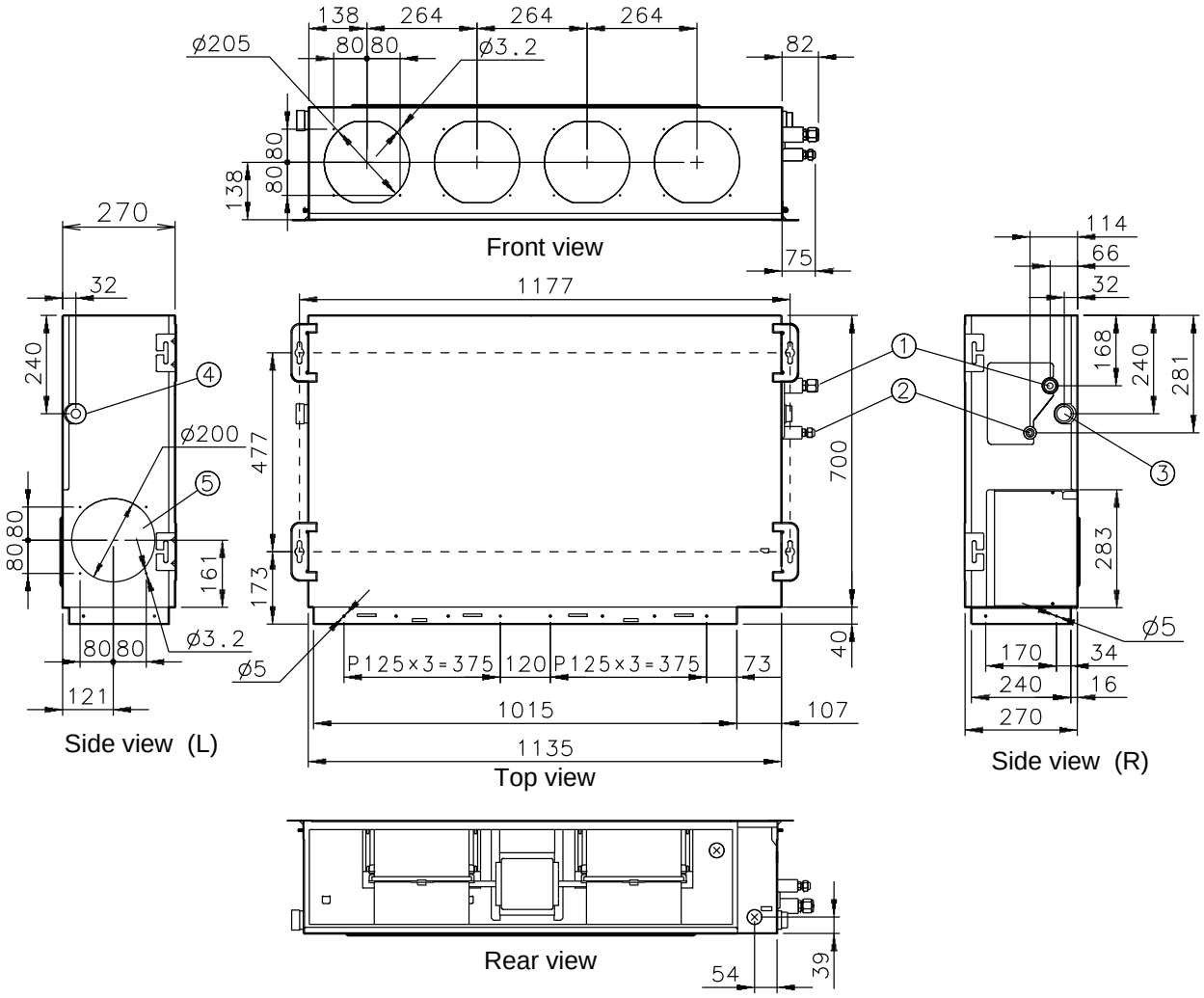

① Refrigerant piping flare connection (Gas)
② Refrigerant piping flare connection (Liquid)
③ Drain piping connection
④ Drain piping connection with cap.
⑤ Knock out hole for fresh air.

DUCT TYPE
AR✱G30-36LMLE

■ INSTALLATION PLACE

(Unit : mm)

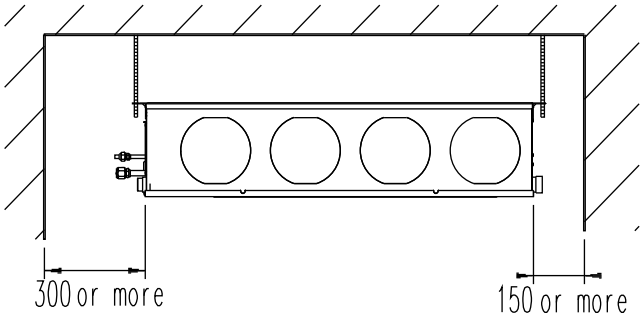

■ MAINTENANCE HOLE

It shall be possible to install and remove the control box.

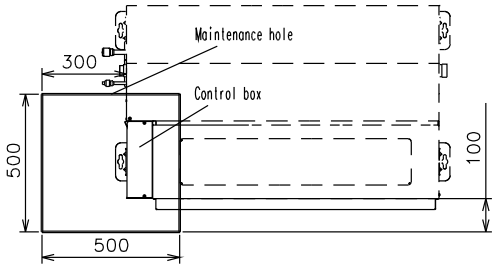

It shall be possible to install and remove the control box, fan units and filter.

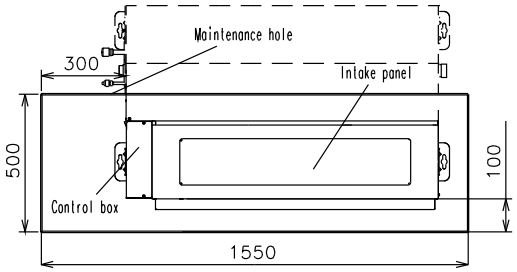

■ WHEN USING A SQUARE DUCT

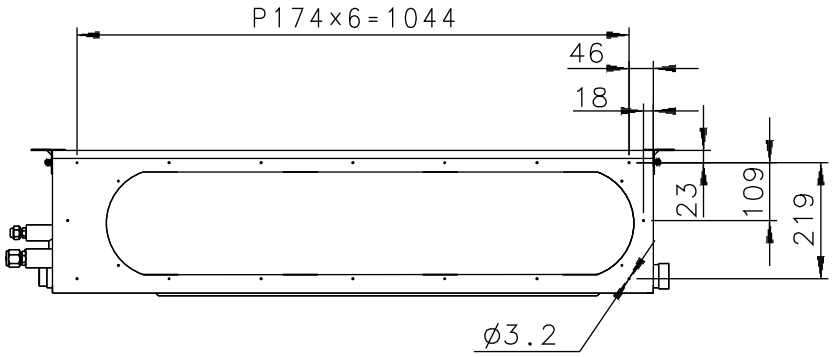

■ BOTTOM AIR INTAKE HOLE

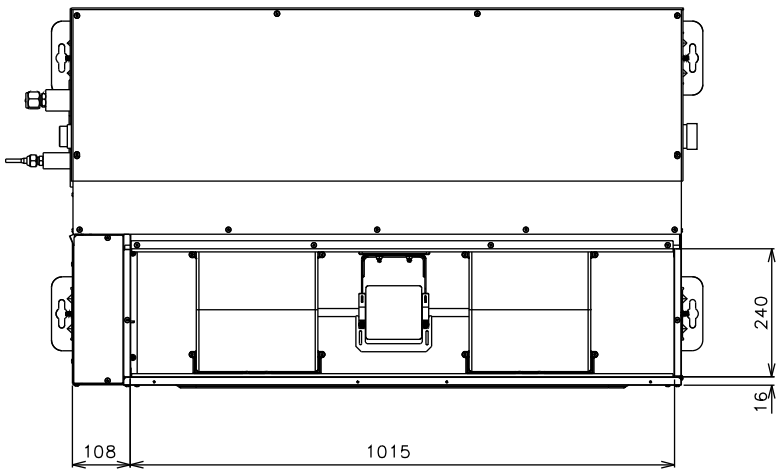

5. WIRING DIAGRAMS

■ MODEL: AR∗G30LMLE, AR∗G36LMLE

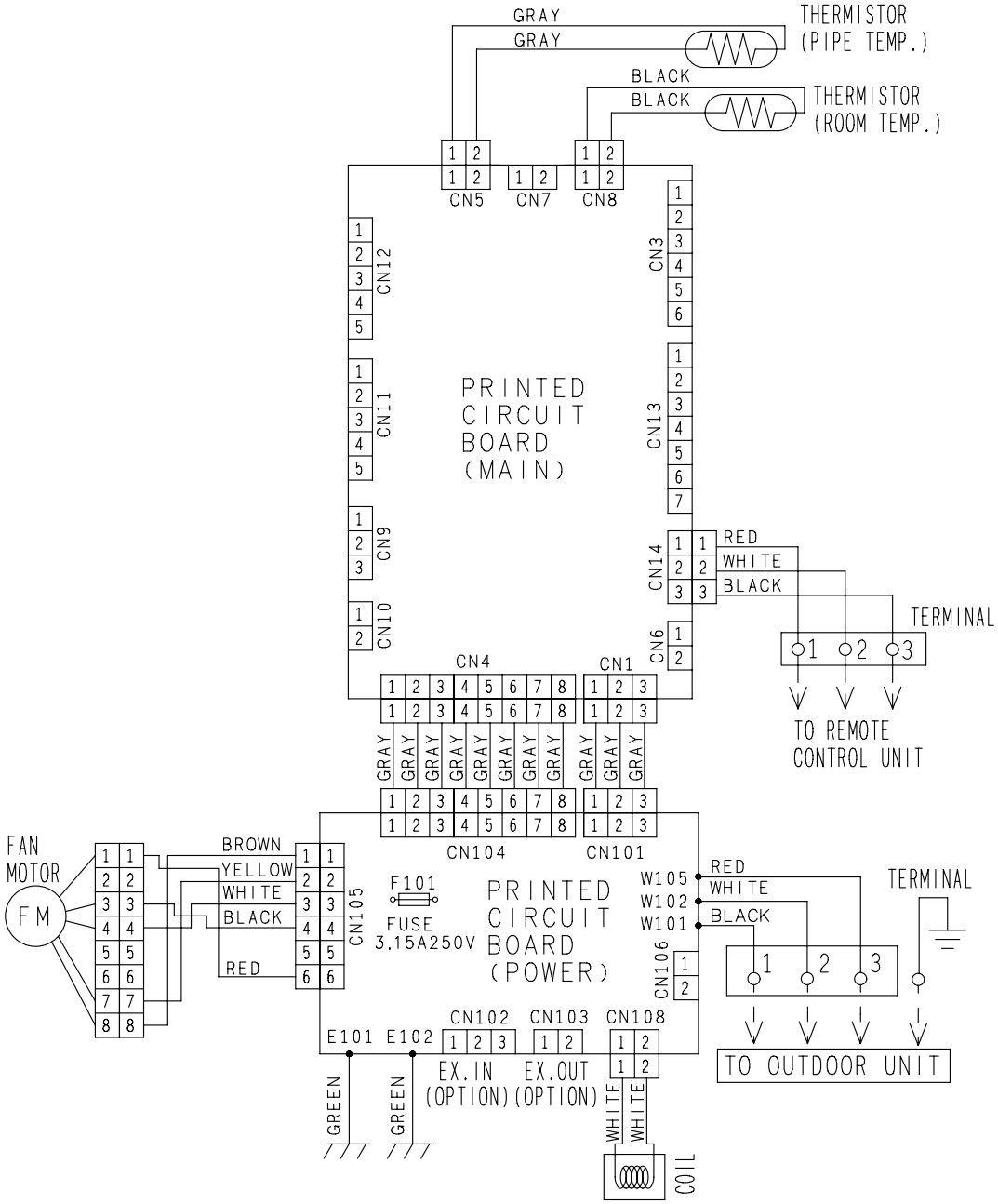

6. CAPACITY TABLE

6-1. COOLING CAPACITY

This table is created using the maximum capacity.

■ MODEL: AR∗G30LMLE

AFR	31.7

		Indoor temperature																				
	°CDB	18			21			23			25			27			29			32		
	°CWB	12			15			16			18			19			21			23		
Outdoor temperature	°CDB	TC	SHC	IP	TC	SHC	IP	TC	SHC	IP	TC	SHC	IP	TC	SHC	IP	TC	SHC	IP	TC	SHC	IP
	-15	8.62	7.14	1.53	9.60	7.19	1.55	9.93	7.81	1.56	10.58	7.84	1.58	10.91	8.46	1.58	11.56	8.43	1.60	12.22	8.98	1.61
	-10	8.48	6.88	1.92	9.44	6.92	1.95	9.76	7.53	1.96	10.41	7.55	1.98	10.73	8.16	1.99	11.37	8.12	2.01	12.02	8.65	2.03
	0	8.08	6.82	2.43	9.00	6.86	2.47	9.30	7.46	2.48	9.92	7.49	2.51	10.22	8.08	2.52	10.84	8.05	2.55	11.45	8.58	2.57
	5	7.98	6.66	2.45	8.89	6.70	2.49	9.19	7.28	2.50	9.80	7.30	2.53	10.10	7.89	2.54	10.71	7.86	2.56	11.31	8.37	2.59
	10	7.94	6.76	2.47	8.84	6.80	2.51	9.14	7.40	2.52	9.75	7.42	2.54	10.05	8.01	2.56	10.65	7.98	2.58	11.25	8.50	2.61
	15	8.63	7.00	2.71	9.61	7.05	2.76	9.94	7.66	2.77	10.60	7.69	2.80	10.92	8.30	2.81	11.58	8.27	2.84	12.23	8.81	2.87
	20	9.64	7.34	3.23	10.74	7.38	3.28	11.11	8.02	3.30	11.84	8.05	3.33	12.21	8.69	3.35	12.94	8.66	3.38	13.67	9.22	3.41
	25	9.47	7.35	3.48	10.55	7.40	3.53	10.91	8.04	3.55	11.63	8.07	3.58	11.99	8.71	3.60	12.71	8.68	3.64	13.43	9.24	3.67
	30	8.78	7.17	3.53	9.78	7.21	3.59	10.11	7.84	3.61	10.78	7.86	3.64	11.11	8.49	3.66	11.78	8.46	3.70	12.45	9.01	3.73
	35	7.90	6.66	3.50	8.80	6.70	3.55	9.10	7.28	3.57	9.70	7.31	3.61	10.00	7.89	3.62	10.60	7.86	3.66	11.20	8.37	3.70
	40	6.00	5.54	3.04	6.68	5.58	3.08	6.91	6.06	3.10	7.37	6.08	3.13	7.60	6.57	3.15	8.05	6.54	3.18	8.51	6.97	3.21
	46	5.36	5.31	3.00	5.97	5.35	3.04	6.17	5.81	3.06	6.58	5.83	3.09	6.78	6.30	3.11	7.19	6.27	3.14	7.59	6.68	3.17

■ MODEL: AR∗G36LMLE

AFR	31.7

		Indoor temperature																				
	°CDB	18			21			23			25			27			29			32		
	°CWB	12			15			16			18			19			21			23		
Outdoor temperature	°CDB	TC	SHC	IP	TC	SHC	IP	TC	SHC	IP	TC	SHC	IP	TC	SHC	IP	TC	SHC	IP	TC	SHC	IP
	-15	8.70	6.96	1.57	9.70	7.00	1.59	10.03	7.61	1.60	10.69	7.63	1.61	11.02	8.24	1.62	11.68	8.21	1.64	12.34	8.74	1.65
	-10	8.55	6.80	1.94	9.53	6.84	1.97	9.85	7.44	1.98	10.50	7.47	2.00	10.83	8.06	2.01	11.48	8.03	2.03	12.13	8.55	2.05
	0	8.08	6.83	2.45	9.00	6.87	2.48	9.31	7.47	2.50	9.93	7.49	2.52	10.23	8.09	2.53	10.85	8.06	2.56	11.46	8.58	2.59
	5	8.07	6.73	2.48	8.99	6.77	2.52	9.29	7.36	2.53	9.90	7.38	2.56	10.21	7.97	2.57	10.82	7.94	2.60	11.44	8.46	2.62
	10	8.03	6.84	2.49	8.94	6.88	2.53	9.25	7.48	2.54	9.85	7.51	2.56	10.16	8.11	2.58	10.77	8.07	2.60	11.38	8.60	2.63
	15	8.63	7.01	2.73	9.62	7.05	2.77	9.94	7.66	2.79	10.60	7.69	2.82	10.93	8.30	2.83	11.58	8.27	2.86	12.24	8.81	2.89
	20	9.70	7.37	3.25	10.81	7.41	3.30	11.17	8.06	3.31	11.91	8.08	3.35	12.28	8.73	3.36	13.02	8.70	3.40	13.75	9.26	3.43
	25	9.55	7.39	3.60	10.64	7.43	3.65	11.00	8.08	3.67	11.72	8.11	3.71	12.09	8.75	3.73	12.81	8.72	3.76	13.54	9.29	3.80
	30	9.34	7.32	4.27	10.41	7.36	4.34	10.76	8.01	4.36	11.47	8.03	4.41	11.83	8.67	4.43	12.54	8.64	4.47	13.25	9.20	4.52
	35	8.85	7.23	4.30	9.86	7.27	4.36	10.19	7.91	4.39	10.86	7.93	4.43	11.20	8.57	4.45	11.87	8.53	4.50	12.54	9.09	4.54
	40	6.56	6.04	3.33	7.31	6.07	3.38	7.56	6.60	3.39	8.05	6.62	3.43	8.30	7.15	3.45	8.80	7.12	3.48	9.30	7.59	3.52
	46	5.90	5.87	3.20	6.57	5.91	3.25	6.79	6.42	3.26	7.24	6.44	3.29	7.46	6.96	3.31	7.91	6.93	3.34	8.36	7.38	3.38

AFR : Air Flow Rate (m^3/min)
TC : Total Capacity (kW)
SHC : Sensible Heat Capacity (kW)
IP : Input Power (kW)

DUCT TYPE
AR∗G30-36LMLE

6-2. HEATING CAPACITY

This table is created using the maximum capacity.

■ MODEL: AR∗G30LMLE

AFR	35.0

			Indoor temperature									
		°CDB	16		18		20		22		24	
Outdoor temperature	°CDB	°CWB	TC	IP	TC	IP	TC	IP	TC	IP	TC	IP
	-15	-16	8.26	3.46	8.07	3.53	7.87	3.61	7.67	3.68	7.48	3.75
	-10	-11	8.75	3.48	8.54	3.55	8.33	3.63	8.12	3.70	7.91	3.77
	-5	-7	9.56	3.54	9.34	3.61	9.11	3.68	8.88	3.76	8.65	3.83
	0	-2	10.15	3.54	9.91	3.62	9.66	3.69	9.42	3.76	9.18	3.84
	5	3	11.27	3.56	11.01	3.64	10.74	3.71	10.47	3.78	10.20	3.86
	7	6	11.76	3.54	11.48	3.61	11.20	3.68	10.92	3.76	10.64	3.83
	10	8	12.16	3.48	11.87	3.55	11.58	3.62	11.29	3.70	11.00	3.77
	15	10	10.86	2.67	10.60	2.72	10.34	2.78	10.08	2.83	9.82	2.88
	20	15	10.86	2.34	10.60	2.39	10.35	2.43	10.09	2.48	9.83	2.52
	24	18	11.30	2.32	11.03	2.37	10.76	2.42	10.49	2.47	10.22	2.51

■ MODEL: AR∗G36LMLE

AFR	35.0

			Indoor temperature									
		°CDB	16		18		20		22		24	
Outdoor temperature	°CDB	°CWB	TC	IP	TC	IP	TC	IP	TC	IP	TC	IP
	-15	-16	9.15	4.14	8.93	4.23	8.71	4.32	8.49	4.40	8.27	4.49
	-10	-11	9.88	4.17	9.65	4.25	9.41	4.34	9.18	4.43	8.94	4.51
	-5	-7	10.56	4.15	10.31	4.23	10.06	4.32	9.80	4.41	9.55	4.49
	0	-2	11.79	4.11	11.51	4.20	11.23	4.29	10.95	4.37	10.67	4.46
	5	3	12.91	4.05	12.60	4.14	12.29	4.22	11.98	4.31	11.68	4.39
	7	6	13.34	3.62	13.02	3.69	12.70	3.77	12.38	3.84	12.07	3.92
	10	8	13.65	3.49	13.32	3.56	13.00	3.63	12.67	3.70	12.35	3.78
	15	10	12.13	2.67	11.84	2.73	11.55	2.78	11.26	2.84	10.98	2.88
	20	15	12.07	2.34	11.79	2.39	11.50	2.44	11.21	2.49	10.92	2.53
	24	18	12.69	2.33	12.38	2.38	12.08	2.43	11.78	2.47	11.48	2.51

AFR : Air Flow Rate (m^3/min)
TC : Total Capacity (kW)
IP : Input Power (kW)

7. FAN PERFORMANCE AND CAPACITY

7-1. NORMAL MODE

■MODEL: AR∗G30LMLE

			Static pressure (Pa)							
			7	10	13	19	21	30	34	47
FAN SPEED	Hi (Heating)	m^3/h	–	–	–	–	–	2270	2240	2100
		l/s	–	–	–	–	–	631	622	583
		CFM	–	–	–	–	–	1336	1318	1236
	Hi (Cooling)	m^3/h	–	–	–	–	–	2050	2020	1900
		l/s	–	–	–	–	–	569	561	527
		CFM	–	–	–	–	–	1207	1189	1118
	Med	m^3/h	–	–	–	–	1685	1585	1540	-
		l/s	–	–	–	–	468	440	428	-
		CFM	–	–	–	–	992	933	906	-
	Low	m^3/h	–	–	1325	1250	1220	-	-	-
		l/s	–	–	368	347	339	-	-	-
		CFM	–	–	780	736	718	-	-	-
	Quiet	m^3/h	1020	995	960	–	–	-	-	-
		l/s	283	276	267	–	–	-	-	-
		CFM	600	586	565	–	–	-	-	-

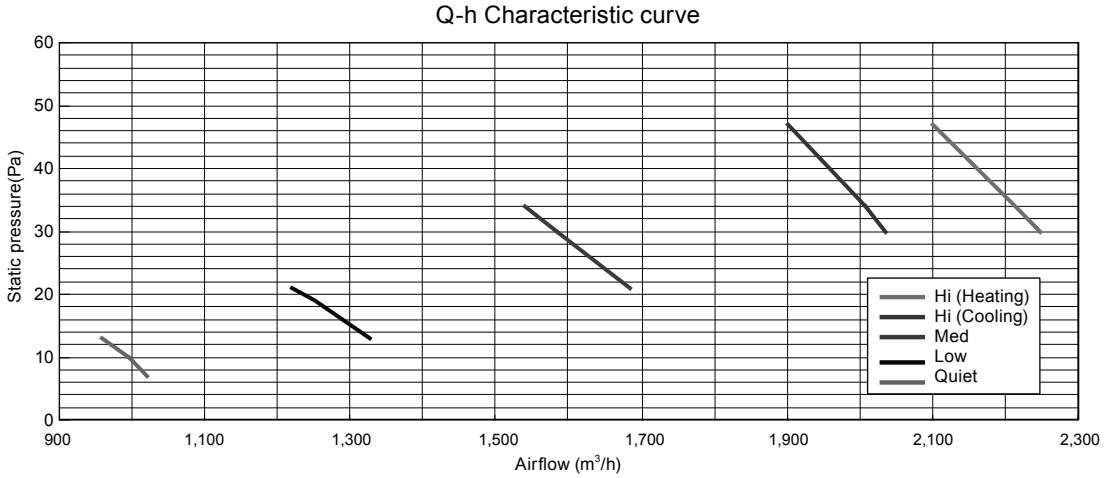

●Cooling

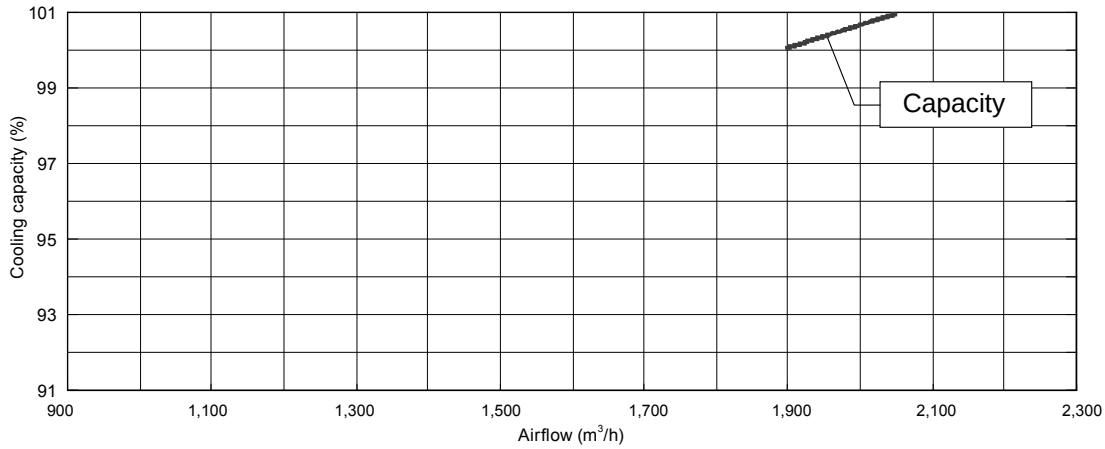

●Heating

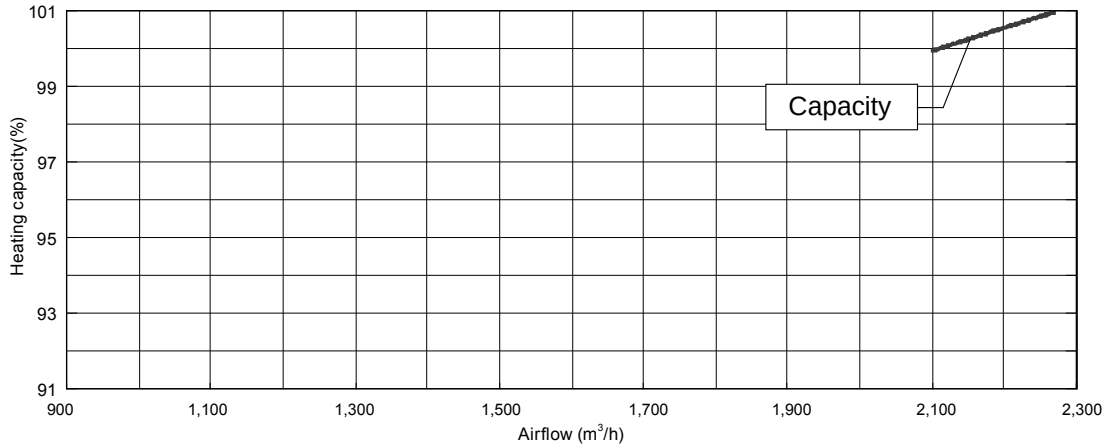

DUCT TYPE
AR∗G30-36LMLE

■MODEL: AR∗G36LMLE

			Static pressure (Pa)							
			7	10	13	19	21	30	34	47
FAN SPEED	Hi (Heating)	m^3/h	-	-	-	-	-	2270	2240	2100
		l/s	-	-	-	-	-	631	622	583
		CFM	-	-	-	-	-	1336	1318	1236
	Hi (Cooling)	m^3/h	-	-	-	-	-	2050	2020	1900
		l/s	-	-	-	-	-	569	561	527
		CFM	-	-	-	-	-	1207	1189	1118
	Med	m^3/h	-	-	-	-	1685	1585	1540	-
		l/s	-	-	-	-	468	440	428	-
		CFM	-	-	-	-	992	933	906	-
	Low	m^3/h	-	-	1325	1250	1220	-	-	-
		l/s	-	-	368	347	339	-	-	-
		CFM	-	-	780	736	718	-	-	-
	Quiet	m^3/h	1020	995	960	-	-	-	-	-
		l/s	283	276	267	-	-	-	-	-
		CFM	600	586	565	-	-	-	-	-

Q-h Characteristic curve

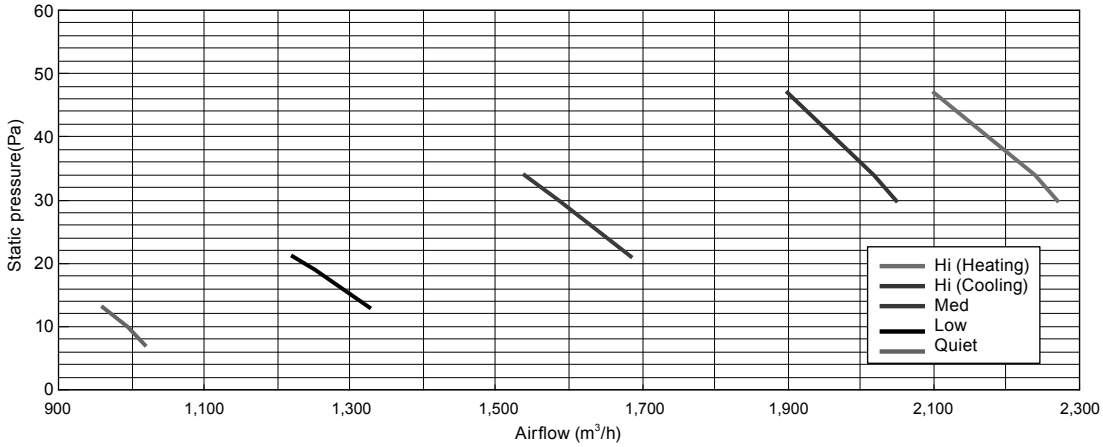

●Cooling

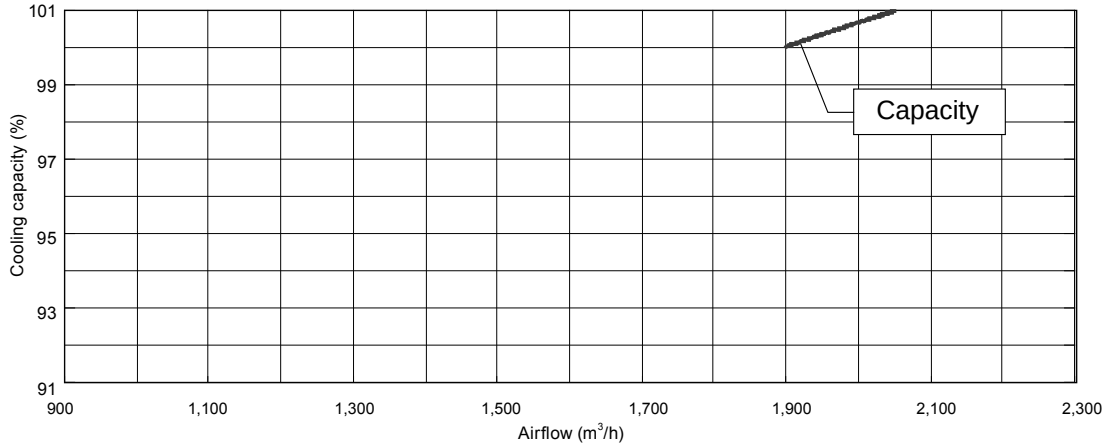

●Heating

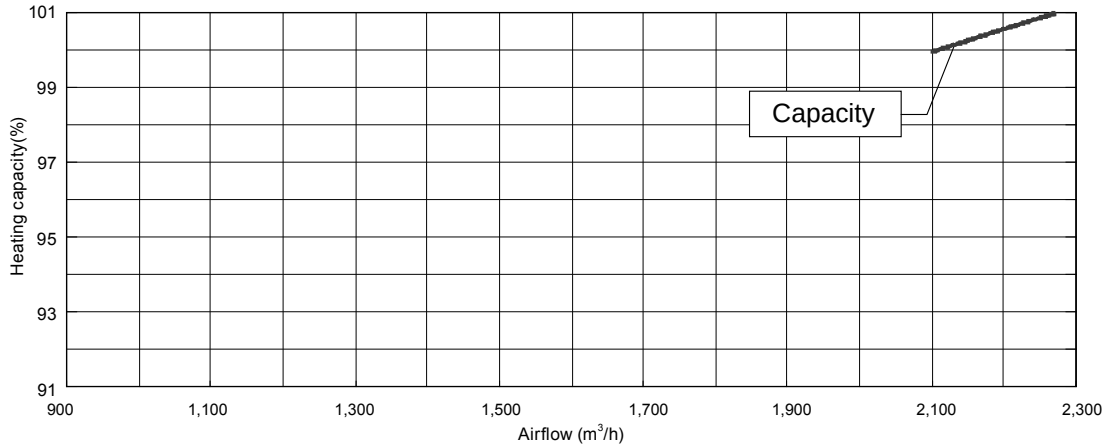

DUCT TYPE
AR∗G30-36LMLE

7-2. STATIC PRESSURE MODE 1

■MODEL: AR∗G30LMLE

			Static pressure (Pa)							
			17	26	32	38	45	55	64	80
FAN SPEED	Hi	m^3/h	-	-	-	-	-	1950	1860	1700
		l/s	-	-	-	-	-	542	517	472
		CFM	-	-	-	-	-	1148	1095	1001
	Med	m^3/h	-	-	-	-	1730	1620	1520	-
		l/s	-	-	-	-	481	450	422	-
		CFM	-	-	-	-	1018	953	895	-
	Low	m^3/h	-	1340	1265	1190	-	-	-	-
		l/s	-	372	351	331	-	-	-	-
		CFM	-	789	745	700	-	-	-	-
	Quiet	m^3/h	1080	970	-	-	-	-	-	-
		l/s	300	269	-	-	-	-	-	-
		CFM	636	571	-	-	-	-	-	-

Q-h Characteristic curve

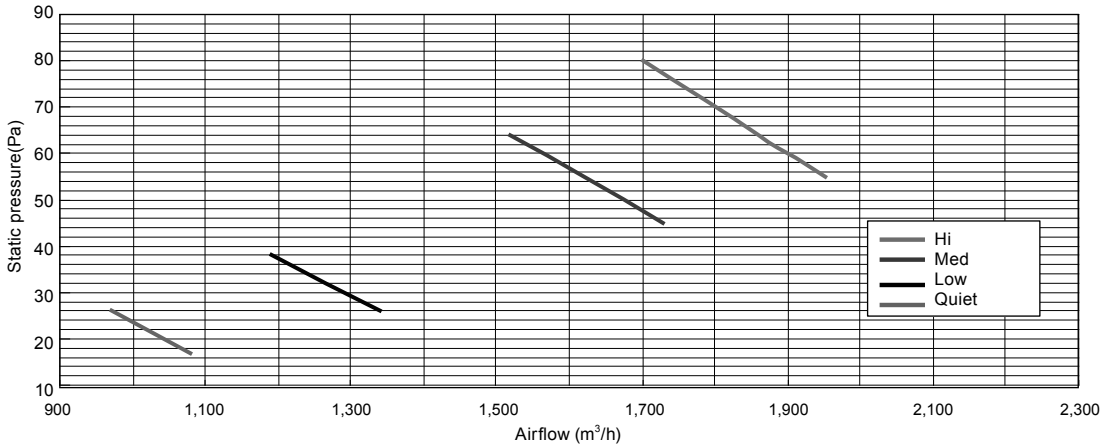

●Cooling

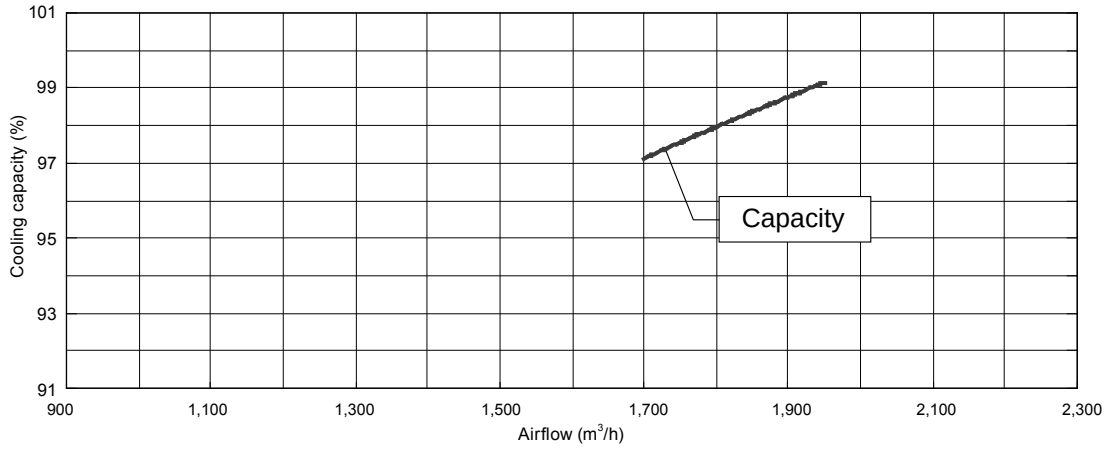

●Heating

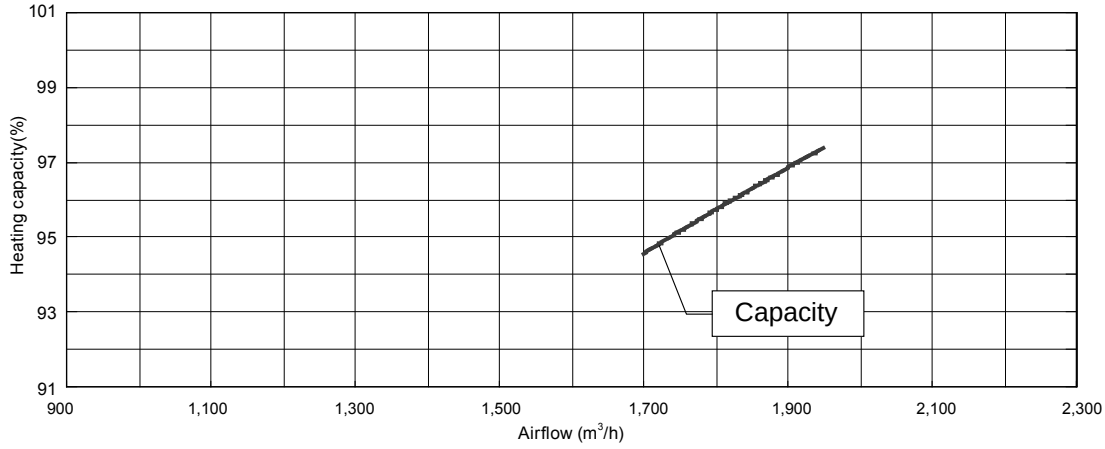

DUCT TYPE
AR∗G30-36LMLE

■MODEL: AR∗G36LMLE

			Static pressure (Pa)							
			17	26	32	38	45	55	64	80
FAN SPEED	Hi	m^3/h	-	-	-	-	-	1950	1860	1700
		l/s	-	-	-	-	-	542	517	472
		CFM	-	-	-	-	-	1148	1095	1001
	Med	m^3/h	-	-	-	-	1730	1620	1520	-
		l/s	-	-	-	-	481	450	422	-
		CFM	-	-	-	-	1018	953	895	-
	Low	m^3/h	-	1340	1265	1190	-	-	-	-
		l/s	-	372	351	331	-	-	-	-
		CFM	-	789	745	700	-	-	-	-
	Quiet	m^3/h	1080	970	-	-	-	-	-	-
		l/s	300	269	-	-	-	-	-	-
		CFM	636	571	-	-	-	-	-	-

Q-h Characteristic curve

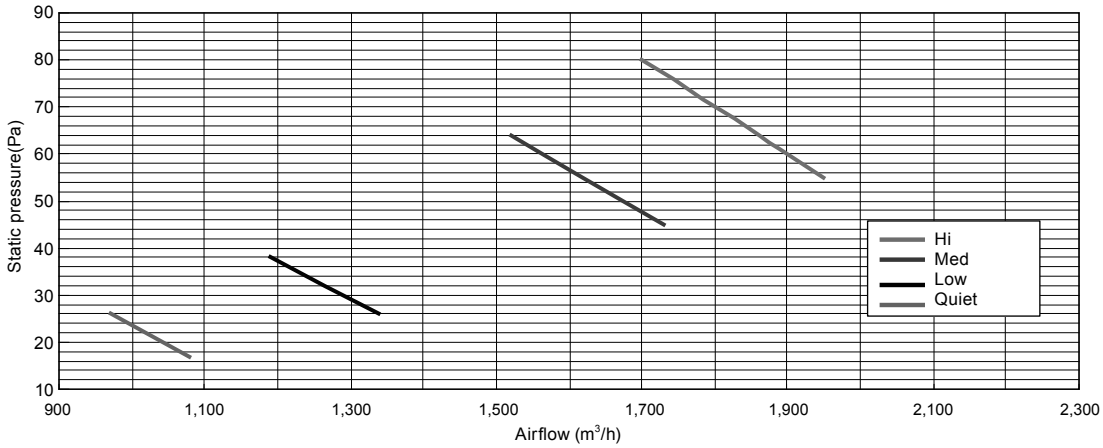

●Cooling

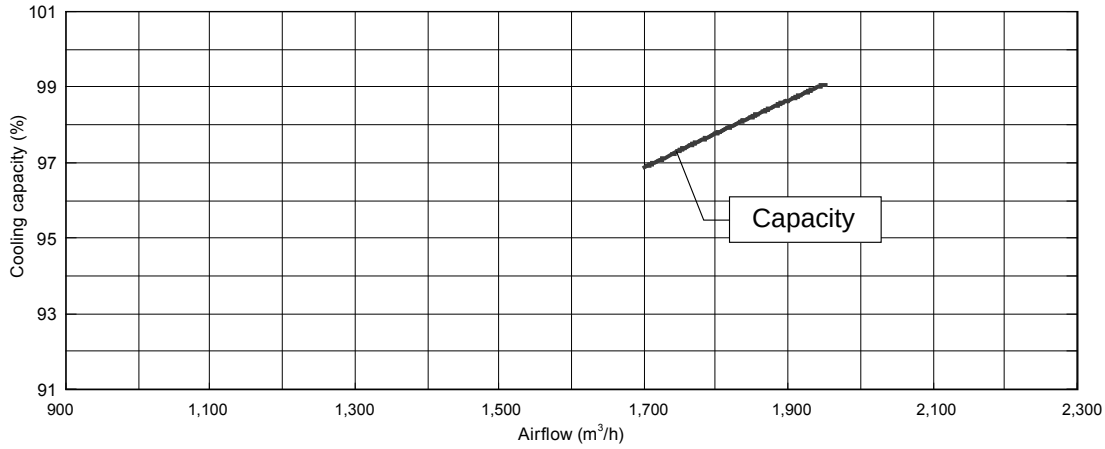

●Heating

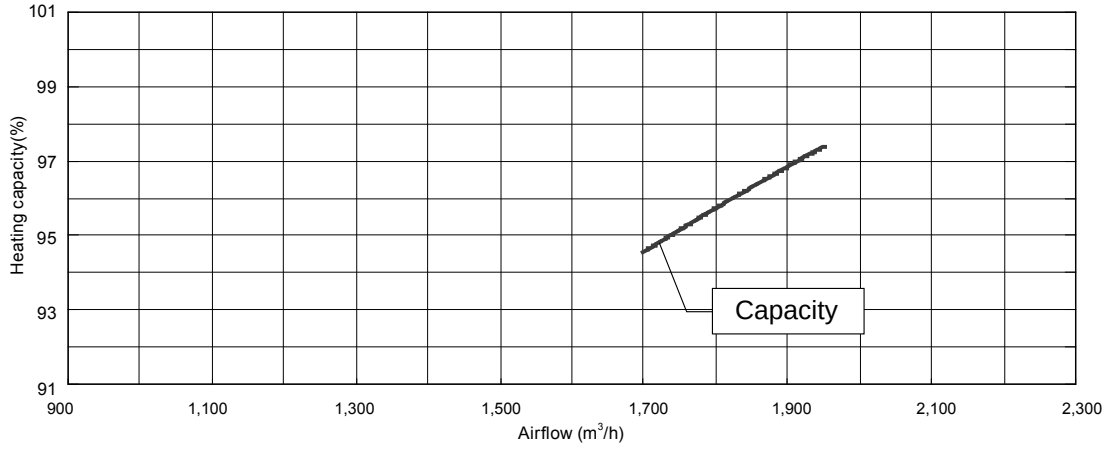

DUCT TYPE
AR∗G30-36LMLE

7-3. STATIC PRESSURE MODE 2

■MODEL: AR∗G30LMLE

			Static pressure (Pa)							
			33	40	49	60	70	85	93	112
FAN SPEED	Hi	m^3/h	-	-	-	-	-	-	1850	1600
		l/s	-	-	-	-	-	-	514	444
		CFM	-	-	-	-	-	-	1089	942
	Med	m^3/h	-	-	-	-	1600	1400	-	-
		l/s	-	-	-	-	444	389	-	-
		CFM	-	-	-	-	942	824	-	-
	Low	m^3/h	-	-	1340	1180	-	-	-	-
		l/s	-	-	372	328	-	-	-	-
		CFM	-	-	789	695	-	-	-	-
	Quiet	m^3/h	1090	960	-	-	-	-	-	-
		l/s	303	267	-	-	-	-	-	-
		CFM	642	565	-	-	-	-	-	-

Q-h Characteristic curve

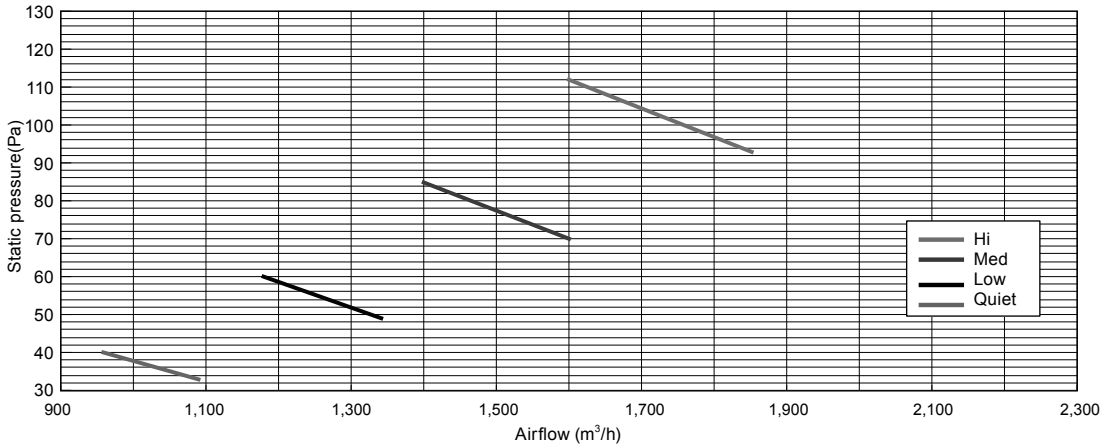

●Cooling

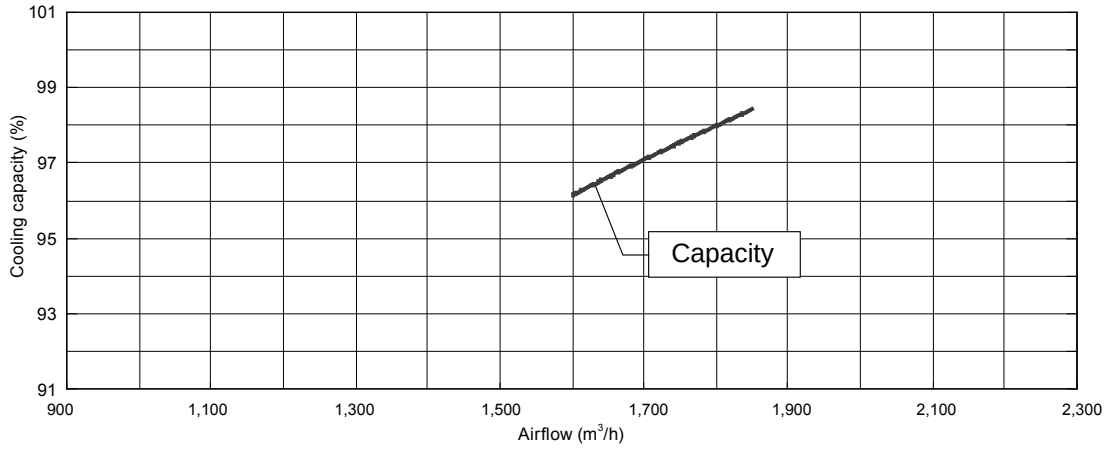

●Heating

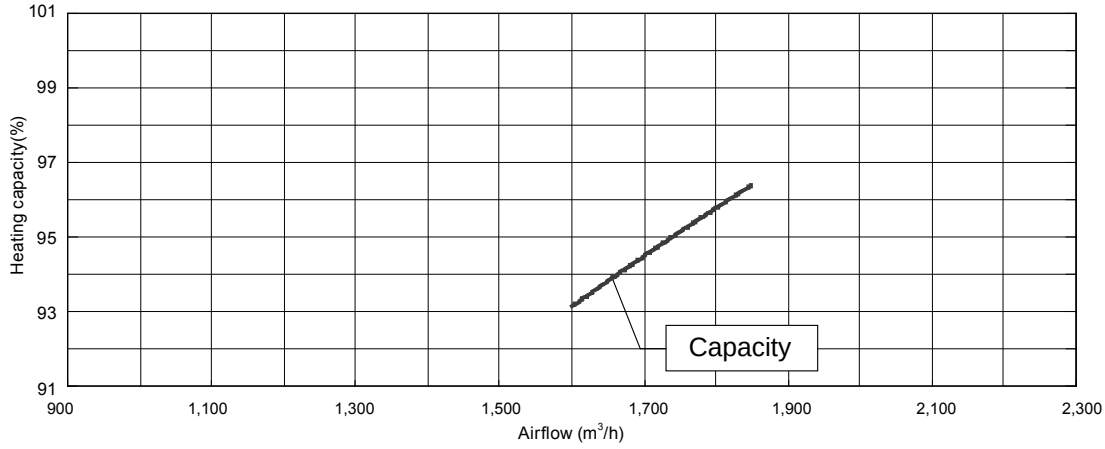

DUCT TYPE
AR∗G30-36LMLE

■MODEL: AR∗G36LMLE

			Static pressure (Pa)							
			33	40	49	60	70	85	93	112
FAN SPEED	Hi	m^3/h	-	-	-	-	-	-	1850	1600
		l/s	-	-	-	-	-	-	514	444
		CFM	-	-	-	-	-	-	1089	942
	Med	m^3/h	-	-	-	-	1600	1400	-	-
		l/s	-	-	-	-	444	389	-	-
		CFM	-	-	-	-	942	824	-	-
	Low	m^3/h	-	-	1340	1180	-	-	-	-
		l/s	-	-	372	328	-	-	-	-
		CFM	-	-	789	695	-	-	-	-
	Quiet	m^3/h	1090	960	-	-	-	-	-	-
		l/s	303	267	-	-	-	-	-	-
		CFM	642	565	-	-	-	-	-	-

Q-h Characteristic curve

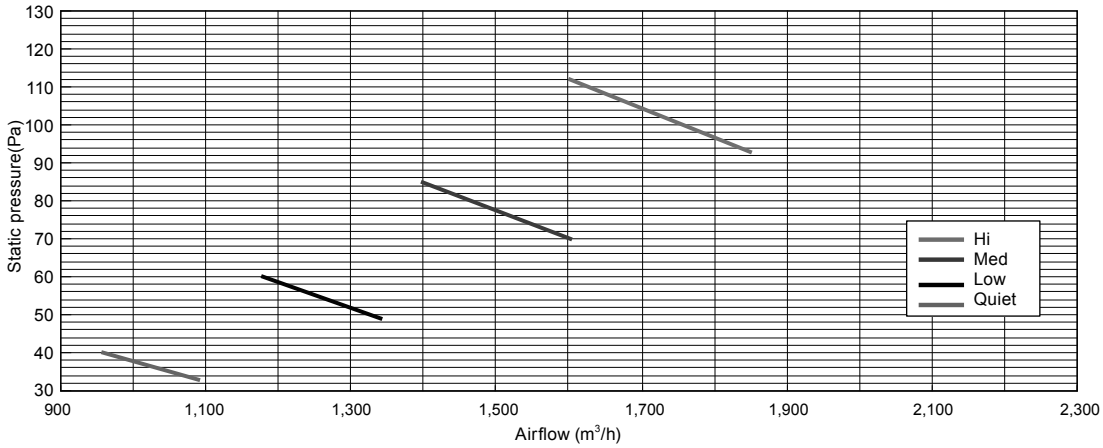

●Cooling

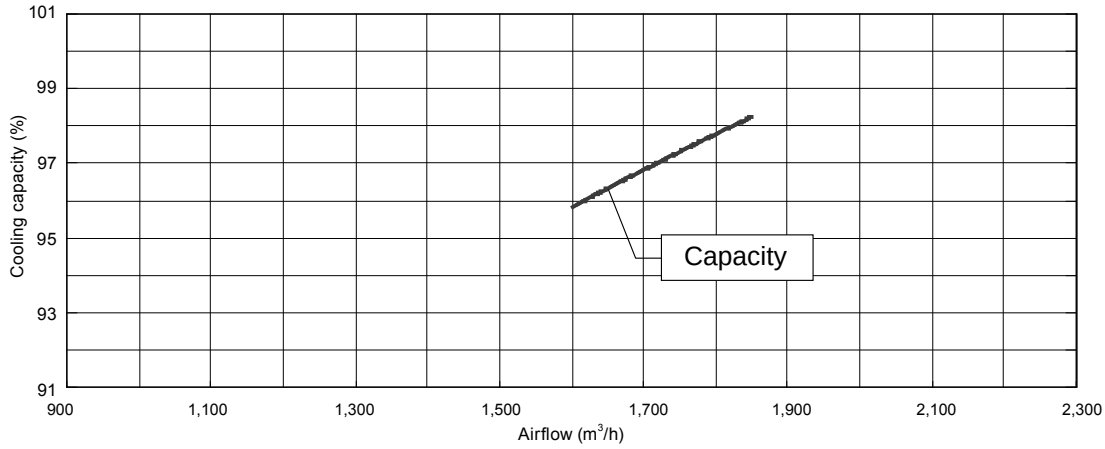

●Heating

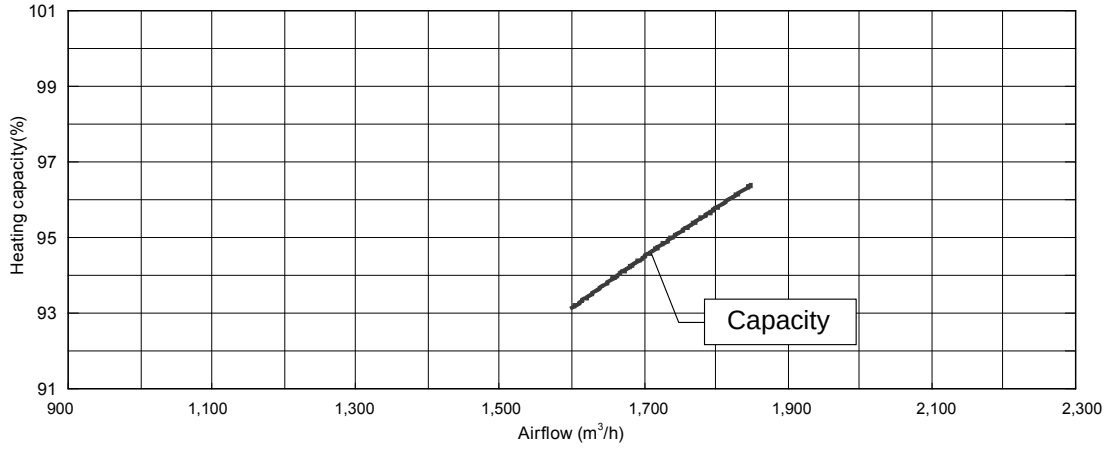

DUCT TYPE
AR∗G30-36LMLE

7-4. STATIC PRESSURE MODE 3

■MODEL: AR∗G30LMLE

			Static pressure (Pa)							
			55	63	77	89	102	117	130	150
FAN SPEED	Hi	m^3/h	-	-	-	-	-	-	1730	1500
		l/s	-	-	-	-	-	-	481	417
		CFM	-	-	-	-	-	-	1018	883
	Med	m^3/h	-	-	-	-	1530	1310	-	-
		l/s	-	-	-	-	425	364	-	-
		CFM	-	-	-	-	901	771	-	-
	Low	m^3/h	-	-	1330	1140	-	-	-	-
		l/s	-	-	369	317	-	-	-	-
		CFM	-	-	783	671	-	-	-	-
	Quiet	m^3/h	1110	960	-	-	-	-	-	-
		l/s	308	267	-	-	-	-	-	-
		CFM	653	565	-	-	-	-	-	-

Q-h Characteristic curve

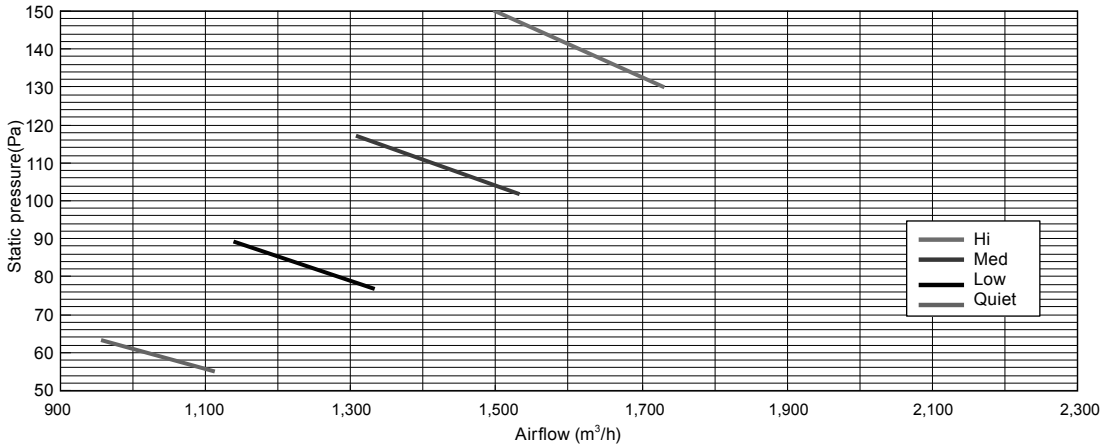

●Cooling

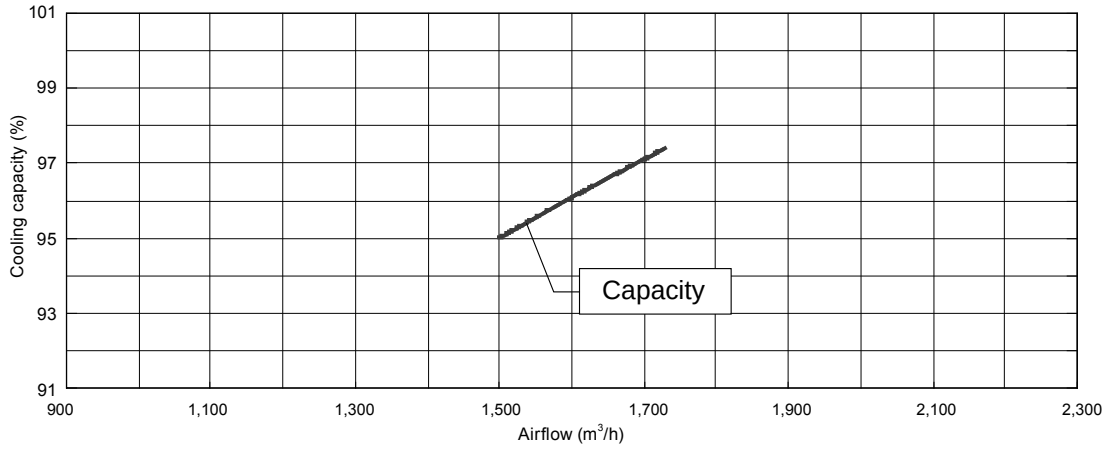

●Heating

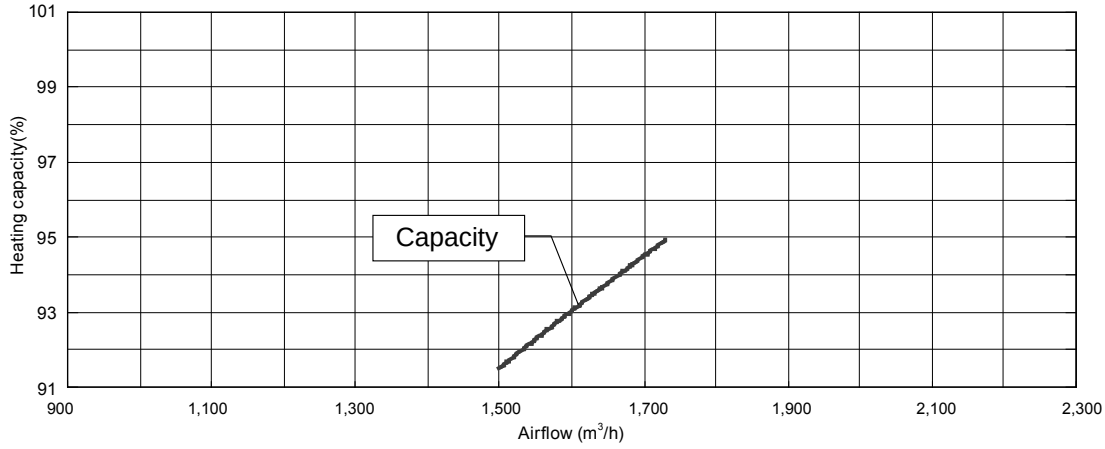

DUCT TYPE
AR∗G30-36LMLE

■MODEL: AR∗G36LMLE

			Static pressure (Pa)							
			55	63	77	89	102	117	130	150
FAN SPEED	Hi	m^3/h	-	-	-	-	-	-	1730	1500
		l/s	-	-	-	-	-	-	481	417
		CFM	-	-	-	-	-	-	1018	883
	Med	m^3/h	-	-	-	-	1530	1310	-	-
		l/s	-	-	-	-	425	364	-	-
		CFM	-	-	-	-	901	771	-	-
	Low	m^3/h	-	-	1330	1140	-	-	-	-
		l/s	-	-	369	317	-	-	-	-
		CFM	-	-	783	671	-	-	-	-
	Quiet	m^3/h	1110	960	-	-	-	-	-	-
		l/s	308	267	-	-	-	-	-	-
		CFM	653	565	-	-	-	-	-	-

Q-h Characteristic curve

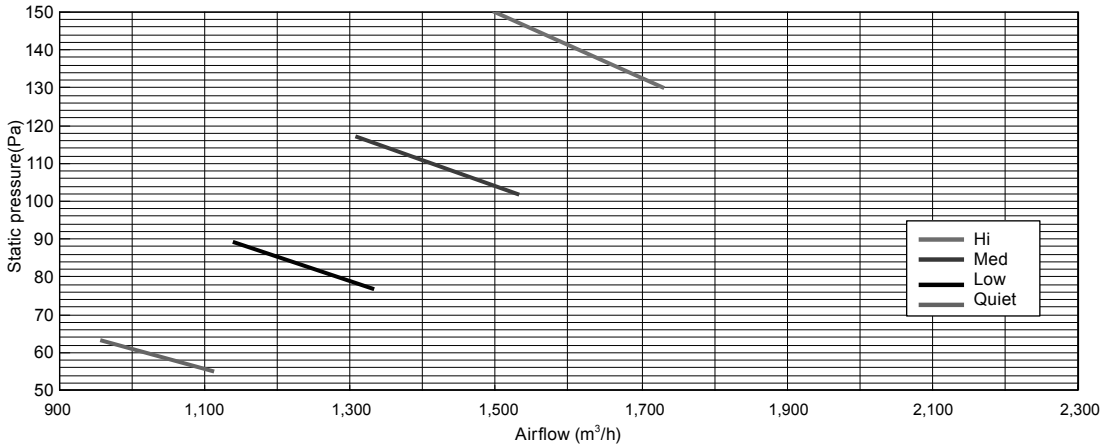

●Cooling

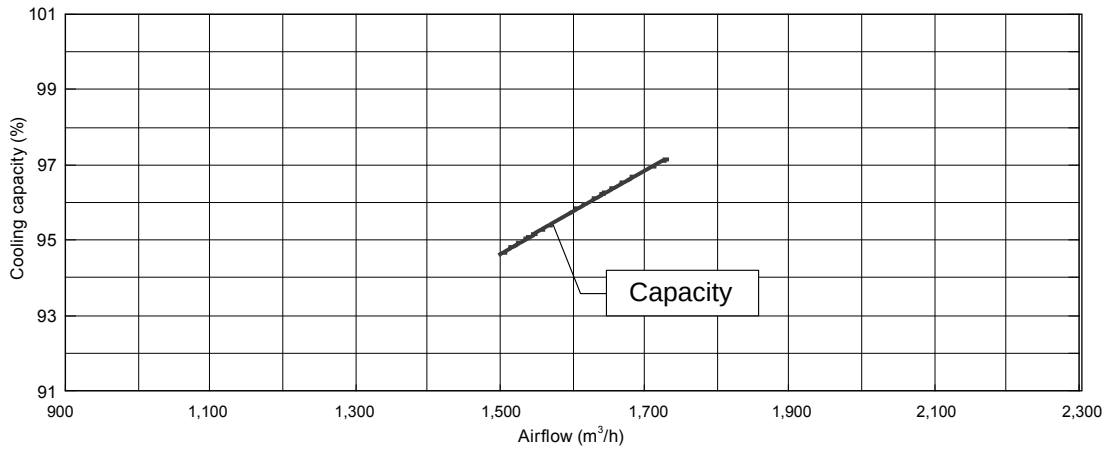

●Heating

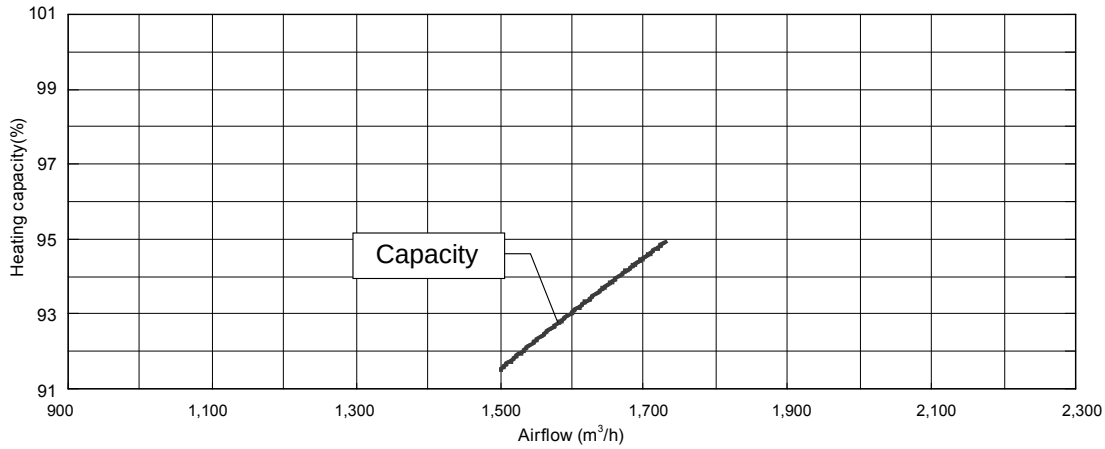

8. OPERATION NOISE (SOUND PRESSURE)

8-1. NOISE LEVEL CURVE

Condition
Static pressure : 47Pa
Static pressure mode : Normal

■ MODEL: AR∗G30LMLE

● COOLING

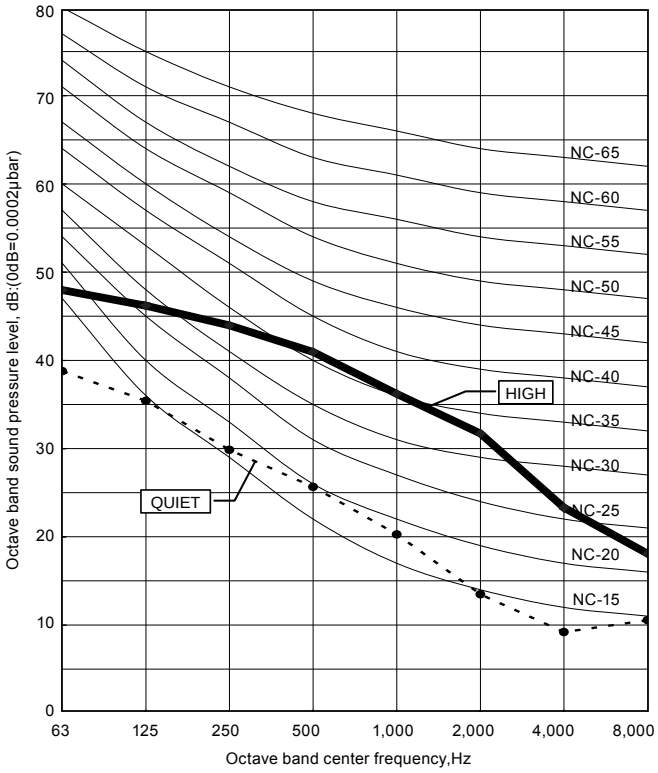

● HEATING

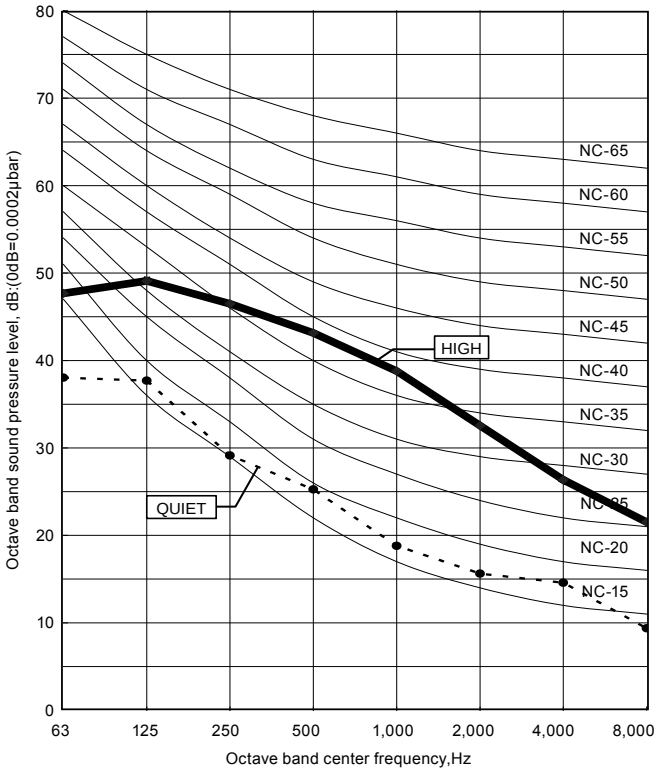

■ MODEL: AR∗G36LMLE

● COOLING

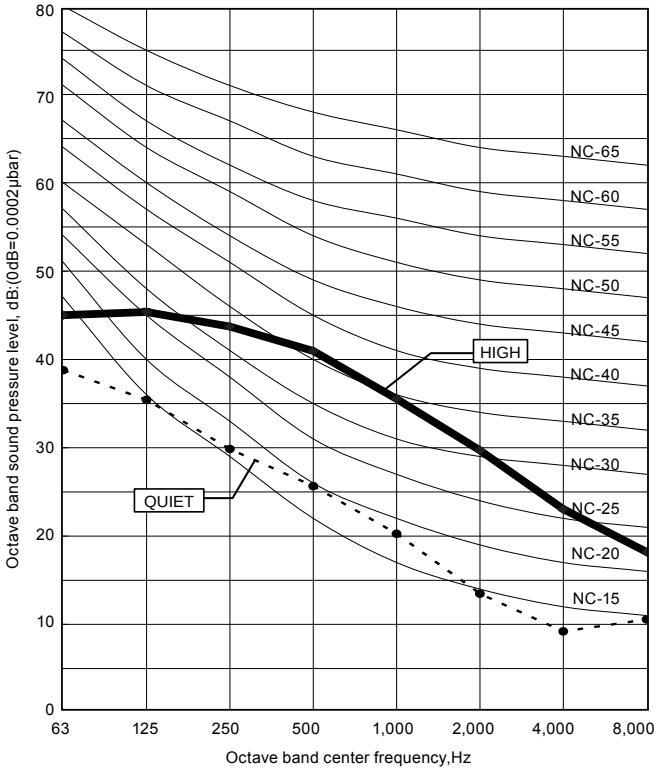

● HEATING

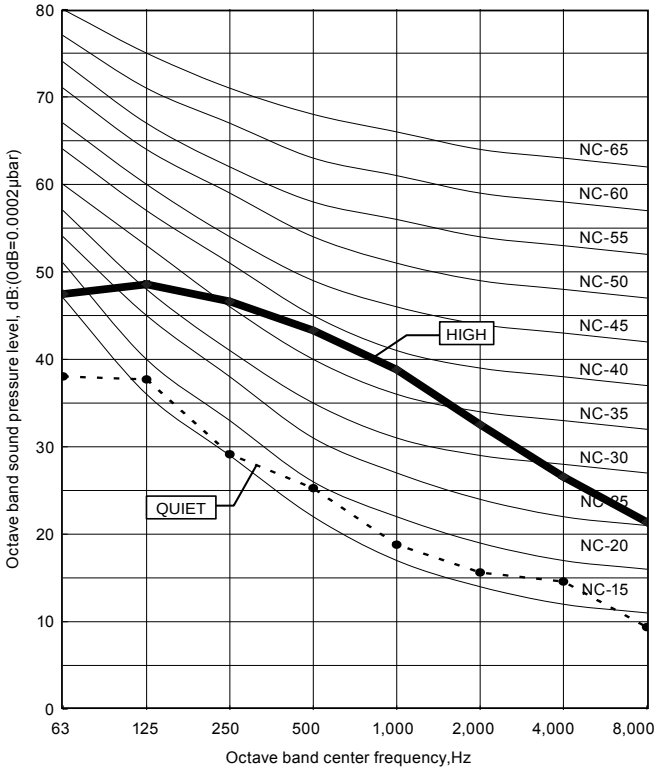

8-2. SOUND LEVEL CHECK POINT

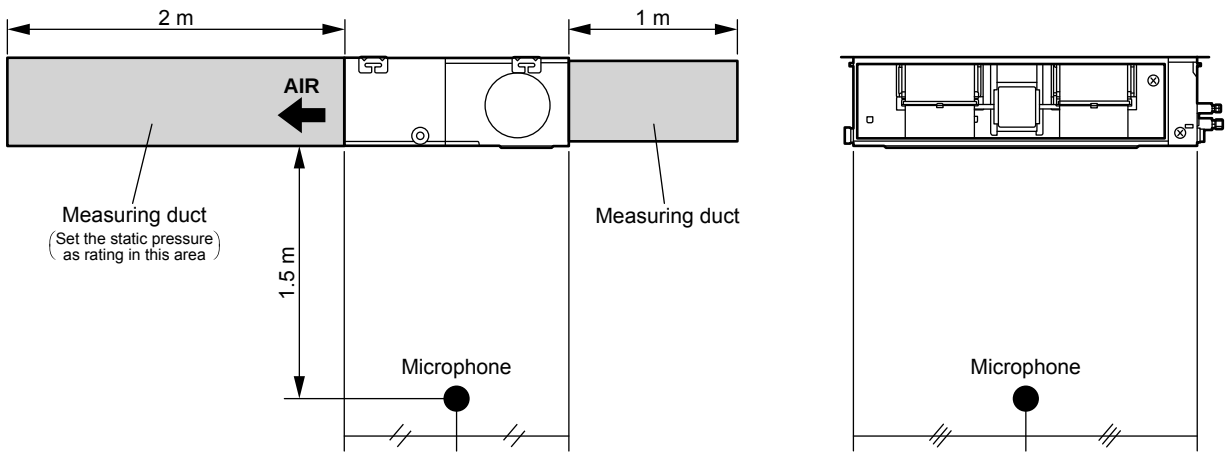

DUCT TYPE
AR✱G30-36LMLE

9. ELECTRIC CHARACTERISTICS

Model name			AR∗G30LMLE	AR∗G36LMLE
Power supply	Voltage	V	230 ~	
	Frequency	Hz	50	
Max. operating current		A	2.0	
Wiring spec.	Connection cable	mm^2	1.5	
	Limited wiring length	m	51	

Note: Wiring specification
1. Selected sample
   (Selected based on Japan Electrotechnical Standards and Codes Committee E0005)
2. Limited wiring length : Limit voltage drop to less than 2%. Increase cable gauge if voltage drop is 2% or more.

10. SAFETY DEVICES

	Protection form	Model	
		AR∗G30LMLE	AR∗G36LMLE
Circuit protection	Current fuse (PCB)	250V 3.15A	
Fan motor protection	Thermal protection program	115±15°C OFF 70°C ON	

DUCT TYPE
AR∗G30-36LMLE

11. EXTERNAL INPUT & OUTPUT

Connector	INPUT	OUTPUT	REMARKS
CN102	Control input	—	See external input/output settings for details.
CN103	—	Operation status output	
CN6	—	Fresh air control output	
CN10	—	Auxiliary heater output	

11-1. EXTERNAL INPUT

■ CONTROL INPUT (Operation/Stop or Forced stop)

The air conditioner can be remotely operated by means of the following on-site work.

"Operation/Stop" mode or "Forced stop" mode can be selected with function setting of indoor unit.

Unit operation is started at the following contents by adding the contact input of a commercial ON/OFF switch to a connector on the external control PC board and turning it ON.

Unit operation	Initial setting after power is ON	Starting mode other than initial setting
Operation mode	Auto changeover	Mode at previous operation
Set temperature	24°C	Temperature at previous operation
Air flow mode	AUTO	Mode at previous operation
Up-down air direction (swing)	Standard air direction (swing OFF)	Air direction at previous operation
Left-right air direction (swing)	Standard air direction (swing OFF)	Air direction at previous operation

● Circuit diagram example

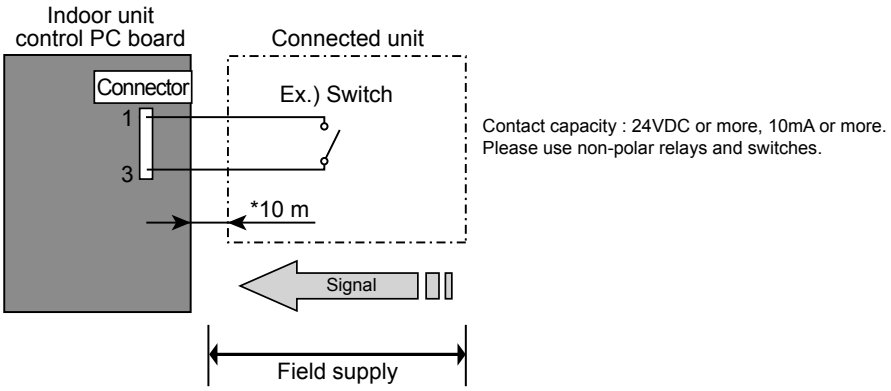

* Make the distance from the PC board to the connected unit within 10m.

● When function setting is in "Operation/Stop" mode

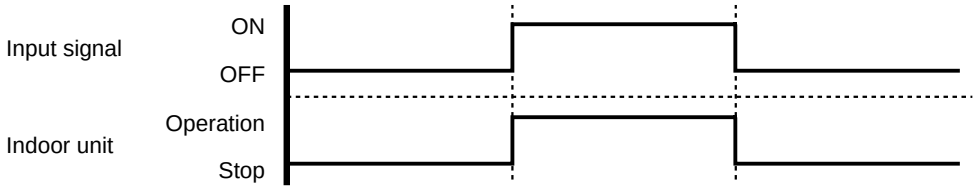

● When function setting is in "Forced stop" mode

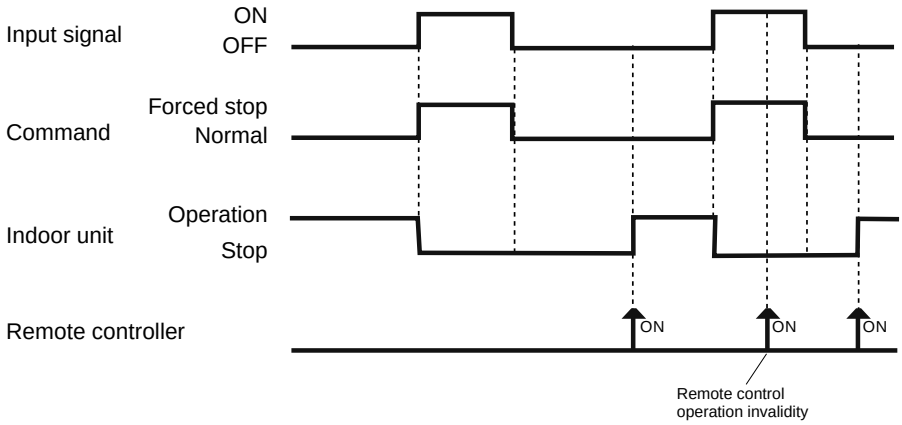

● Parts (Optional)

Model name
UTD-ECS5A

Wire (External input)

DUCT TYPE
AR✱G30-36LMLE

11-2. EXTERNAL OUTPUT

■ OPERATION STATUS OUTPUT

An air conditioner operation status signal can be output.

● Circuit diagram example

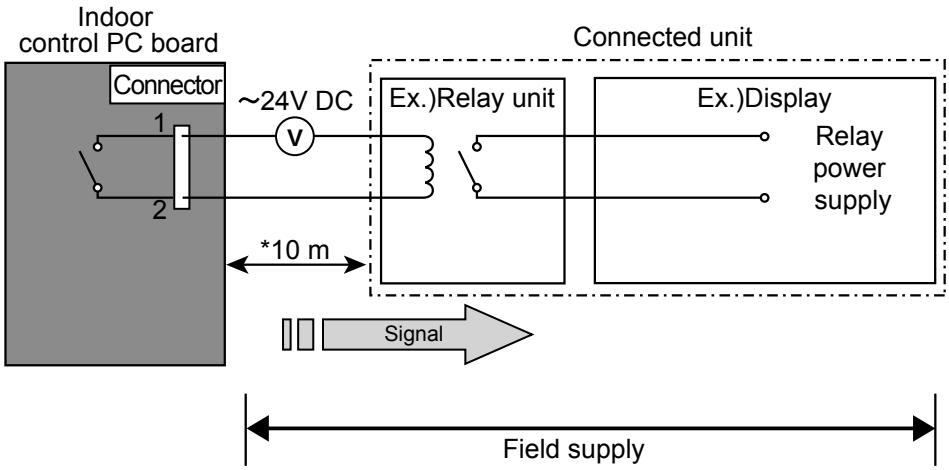

* Make the distance from the PC board to the connected unit within 10m.
Relay spec. : Max.24VDC, 10mA to less than 500mA.

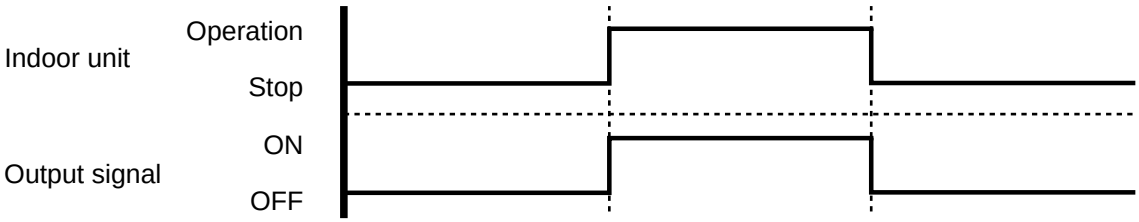

● Parts (Optional)

Model name
UTD-ECS5A

Wire (External output)

DUCT TYPE
AR✱G30-36LMLE

■ FRESH AIR CONTROL OUTPUT

A signal linked to air conditioner indoor fan ON can be output.

* However, signal becomes OFF during cold air prevention control operation.

● Circuit diagram example

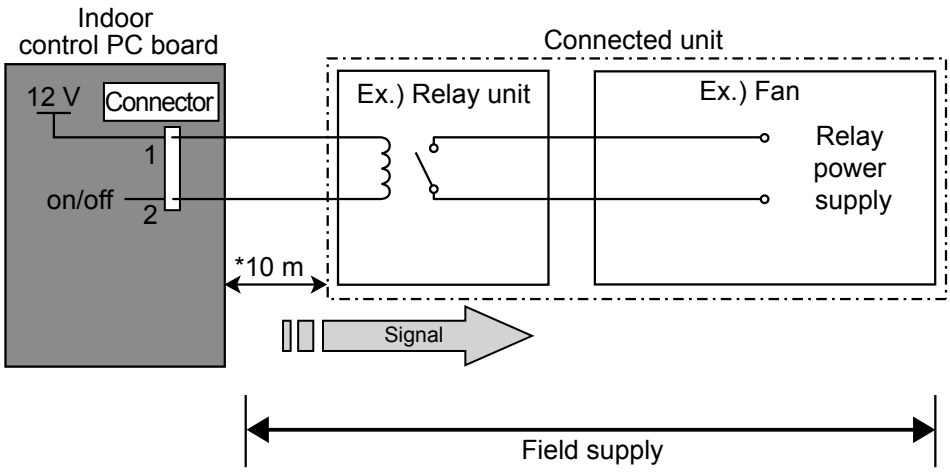

* Make the distance from the PC board to the connected unit within 10m.
Relay spec. : Rated 12VDC, 50mA or less.

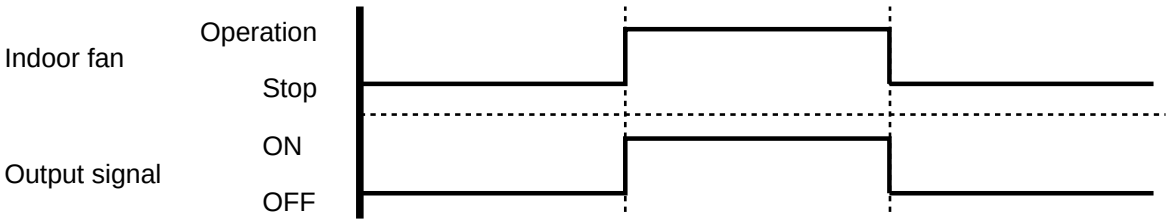

● Parts (Optional)

Model name
UTD-ECS5A

Wire (Fresh air output)

DUCT TYPE
AR✱G30-36LMLE

■ AUXILIARY HEATER OUTPUT

A signal is outputed from Connector when indoor fan and compressor turned on under heating operation.

*Signal output performance specifications are as shown on the right

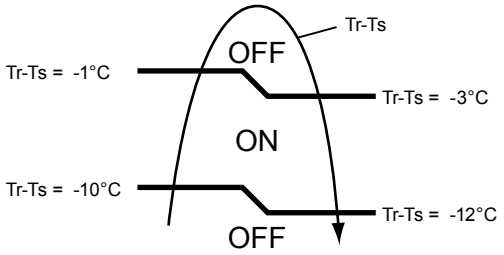

Ex. When Set Temperature(Ts) is 22°C;

- and Room Temperature(Tr) increase above 12°C, signal output is on.
- and Room Temperature(Tr) increase above 21°C, signal output is off.
- and Room Temperature(Tr) decrease below 19°C, signal output is on.
- and Room Temperature(Tr) decrease below 10°C, signal output is off.

● Jumper wire (Indoor Unit)

This is used to continue indoor unit fan operation for 1 minute after thermo OFF in heating mode.
1 minute delay control set by cutting jumper wire on PCB.

● Circuit diagram example

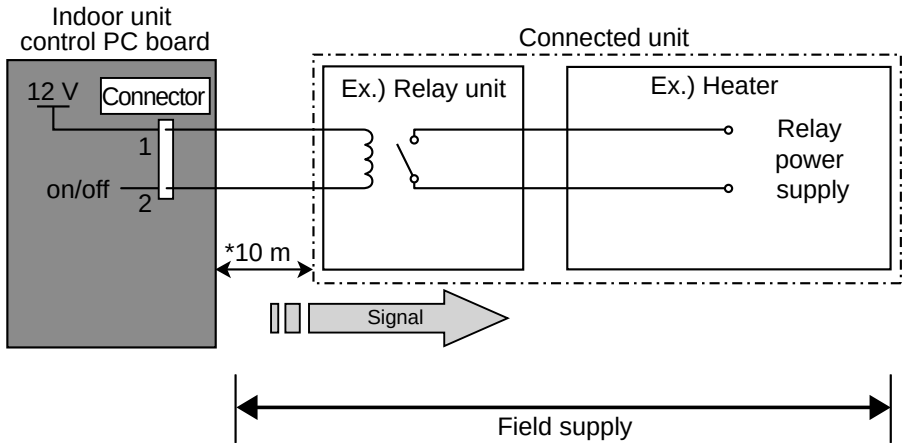

* Make the distance from the PC board to the connected unit within 10m.
Relay spec. : Rated 12VDC, 50mA or less.

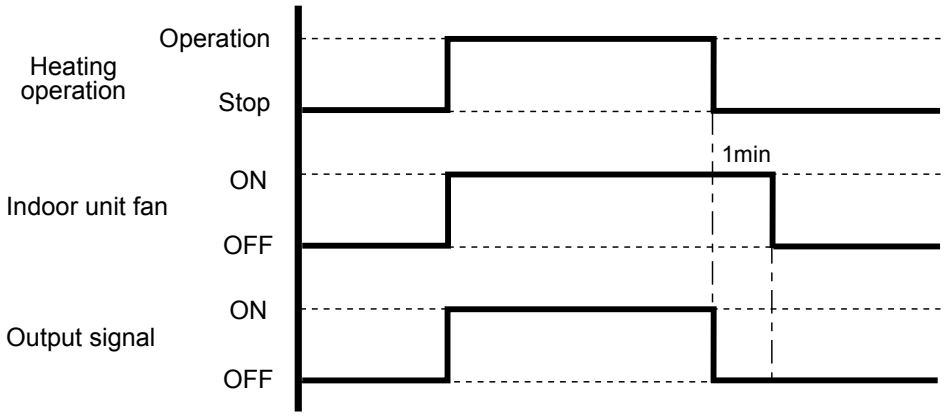

CAUTION

Please locate a external heater between the indoor unit and the outlet.
Please be sure to use delay control of a fan.

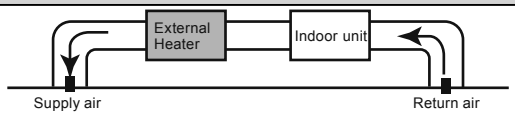

● Parts (Optional)

Model name
UTD-ECS5A

Wire (Heater output)

12. FUNCTION SETTINGS

12-1. INDOOR UNIT

INDOOR UNIT		
DIP SW	1	Remote controller address setting
	2	
	3	
	4	
Jumper Wire	JM1	Setting forbidden
	JM2	
	JM3	Fan delay setting

■ SWITCH POSITION

MAIN PCB

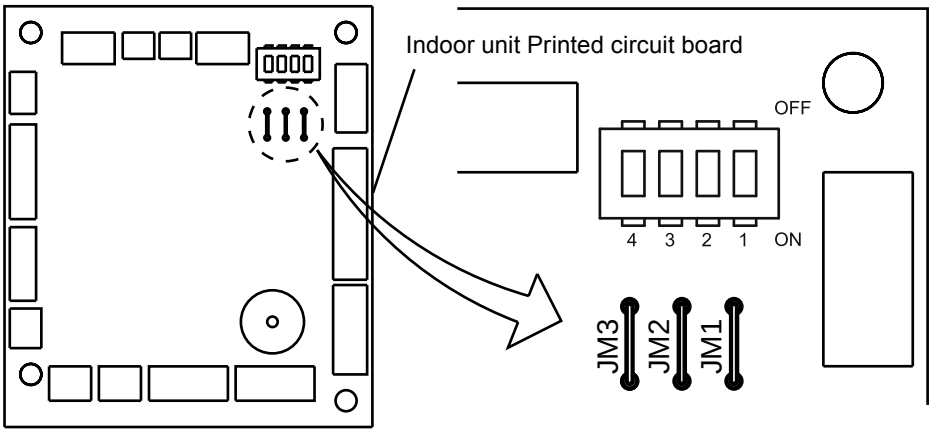

■ DIP-SW SETTING

● Remote controller address setting

A number of indoor units can be operated at the same time using a wired remote controller.
Set the unit number of each indoor unit using the DIP switches on the indoor unit circuit board.
(See the following table.)
The DIP switches are normally set to make the unit number 00.

(◆. . .Factory setting)

Remote controller address	DIP switch No.			
	1	2	3	4
◆ 00	OFF	OFF	OFF	OFF
01	ON	OFF	OFF	OFF
02	OFF	ON	OFF	OFF
03	ON	ON	OFF	OFF
04	OFF	OFF	ON	OFF
05	ON	OFF	ON	OFF
06	OFF	ON	ON	OFF
07	ON	ON	ON	OFF
08	OFF	OFF	OFF	ON
09	ON	OFF	OFF	ON
10	OFF	ON	OFF	ON
11	ON	ON	OFF	ON
12	OFF	OFF	ON	ON
13	ON	OFF	ON	ON
14	OFF	ON	ON	ON
15	ON	ON	ON	ON

DUCT TYPE
AR✱G30-36LMLE

■ JUMPER WIRE SETTING

● Setting forbidden (JM1, JM2)

● Fan delay setting (JM3)

When the indoor unit is stopped while operating in conjunction with auxiliary heater, the indoor unit fan operation will continue for one minute.

(◆. . .Factory setting)

	JM 3	JM state
◆	Connect	Invalid
	Disconnect	Valid

DUCT TYPE
AR✱G30-36LMLE

12-2. INDOOR UNIT (Setting by remote controller)

- The function settings of the control of the indoor unit can be changed by this procedure according to the installation conditions. Incorrect settings can cause the indoor unit to malfunction.
- After the power is turned on, perform the Function Setting according to the installation conditions using the remote controller.
- The settings may be selected between the following two: Function Number or Setting Value.
- Settings will not be changed if invalid numbers or setting values are selected.

■ PREPARATION

- Turn on the power.

* Before turning on the power of the indoor units, make sure the piping air-tight test and vacuuming have been conducted.

* Also check again to make sure no wiring mistakes were made before turning on the power.

■ FUNCTION SETTING METHOD (for Wired remote controller)

● Setting method

(1) Press the SET TEMP. buttons (∨) (∧) and FAN button simultaneously for more than 5 seconds to enter the function setting mode.

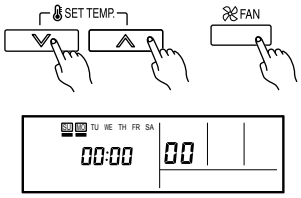

(2) Press the SET BACK button to select the indoor unit number.

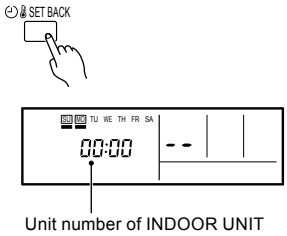

(3) Press the Set time buttons to select the function number.

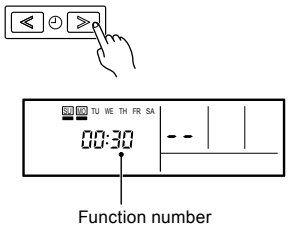

(4) Press the SET TEMP. buttons (∨) (∧) to select the setting value. The display flashes during setting value selection.

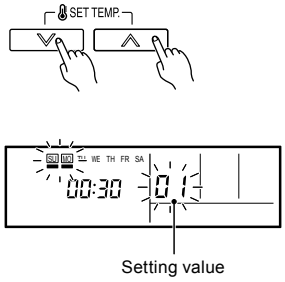

DUCT TYPE
AR✱G30-36LMLE

(5) Press the TIMER SET button to confirm the setting. Press the TIMER SET button for a few seconds until the setting value stops flashing. If the setting value display changes or if "- -" is displayed when the flashing stops, the setting value has not been set correctly. (An invalid setting value may have been selected for the indoor unit.)

(6) Repeat steps 2 to 5 to perform additional settings. Press the SET TEMP. buttons (⩔) (⩓) and FAN button simultaneously again for more than 5 seconds to cancel the function setting mode. In addition, the function setting mode will be automatically canceled after 1 minute if no operation is performed.

(7) After completing the FUNCTION SETTING, be sure to turn off the power and turn it on again.

⚠CAUTION
• After turning off the power, wait 30 seconds or more before turning on it again. The Function Setting will not become active unless the power is turned off then on again.

■ CONTENTS OF FUNCTION SETTING

- Follow the instructions in the Local Setup Procedure, which is supplied with the remote control, in accordance with the installed condition.
  After the power is turned on, perform the Function Setting on the remote control.
- The settings may be selected between the following two: Function Number or Setting Value.
- Settings will not be changed if invalid numbers or setting values are selected.

1)	Filter sign
2)	Static pressure
3)	Cooler room temperature correction
4)	Heater room temperature correction
5)	Auto restart
6)	Indoor room temperature sensor switching function
7)	Cool air prevention
8)	Remote controller signal code
9)	External input control
10)	Room temperature control switching
11)	Indoor unit fan control for energy saving

1) Filter sign

The indoor unit has a sign to inform the user that it is time to clean the filter. Select the time setting for the filter sign display interval in the table below according to the amount of dust or debris in the room. If you do not wish the filter sign to be displayed, select the setting value for "No indication".

(◆. . .Factory setting)

	Setting Description	Function Number	Setting Value
	Standard (2500 hours)	11	00
	Long interval (4400 hours)		01
	Short interval (1250 hours)		02
◆	No indication		03

2) Setting the static pressure

Select appropriate static pressure according to the installation conditions.
Refer to the technical manual for details or follow the instructions of the duct designer.

(◆. . .Factory setting)

	Setting Description	Function Number	Setting Value
◆	Normal	21	00
	High static pressure 1		01
	High static pressure 2		02
	High static pressure 3		03

3) Setting the cooler room temperature correction

Depending on the installed environment, the room temperature sensor may require a correction. The settings may be selected as shown in the table below.

(◆. . .Factory setting)

	Setting Description	Function Number	Setting Value
◆	Standard	30	00
	Slightly lower control		01
	Lower control		02
	Warmer control		03

DUCT TYPE
AR✱G30-36LMLE

4) Setting the heater room temperature correction

Depending on the installed environment, the room temperature sensor may require a correction. The settings may be changed as shown in the table below.

(◆. . .Factory setting)

	Setting Description	Function Number	Setting Value
◆	Standard	31	00
	Lower control		01
	Slightly warmer control		02
	Warmer control		03

5) Auto restart

Enable or disable automatic system restart after a power outage.

(◆. . .Factory setting)

	Setting Description	Function Number	Setting Value
◆	Yes	40	00
	No		01

* Auto restart is an emergency function such as for power failure etc.
  Do not start and stop the indoor unit by this function in normal operation.
  Be sure to operate by the control unit, or external input device.

6) Indoor room temperature sensor switching function

(Only for Wired remote controller)

The following settings are needed when using the control by Wired remote controller temperature sensor.

(◆. . .Factory setting)

	Setting Description	Function Number	Setting Value
◆	No	42	00
	Yes		01

* If setting value is “00”:
Room temperature is controlled by the indoor unit temperature sensor.

* If setting value is “01”:
Room temperature is controlled by either indoor unit temperature sensor or remote controller unit sensor.

7) Cool air prevention

This setting is used to set the fan speed when the compressor stops once the room temperature has reached the set temperature during heating operation.

(◆. . .Factory setting)

	Setting Description	Function Number	Setting Value
◆	Super low	43	00
	Follow the setting on the remote controller (corresponding to ventilation)		01

8) Remote controller signal code

Change the indoor unit Signal Code, depending on the remote controllers.

(◆. . .Factory setting)

	Setting Description	Function Number	Setting Value
◆	A	44	00
	B		01
	C		02
	D		03

9) External input control

"Operation/Stop" mode or "Forced stop" mode can be selected.

(◆. . .Factory setting)

	Setting Description	Function Number	Setting Value
◆	Operation/Stop mode	46	00
	(Setting forbidden)		01
	Forced stop mode		02

DUCT TYPE
AR✱G30-36LMLE

10) Room temperature control switching

This setting is used to set the room temperature control method when the wired remote controller is selected by the Indoor Room Temperature Sensor Switching Function.

(◆. . .Factory setting)

	Setting Description	Function Number	Setting Value
◆	Control by the sensors of both the indoor unit and the wired remote controller.	48	00
	Control only by the sensor of the wired remote controller		01

11) Indoor unit fan control for energy saving (Only cooling mode)

Enable or disable indoor unit fan control when the outdoor unit is stopped.

(◆. . .Factory setting)

	Setting Description	Function Number	Setting Value
	No	49	00
◆	Yes		01

* If setting value is “00”:
  When the outdoor unit is stopped, the indoor unit fan operates following the setting on the remote controller continuously.
* If setting value is “01”:
  When the outdoor unit is stopped, the indoor unit fan operates at very low speed intermittently.

DUCT TYPE
AR✱G30-36LMLE

12-3. WIRED REMOTE CONTROLLER

■ SWITCH POSITION

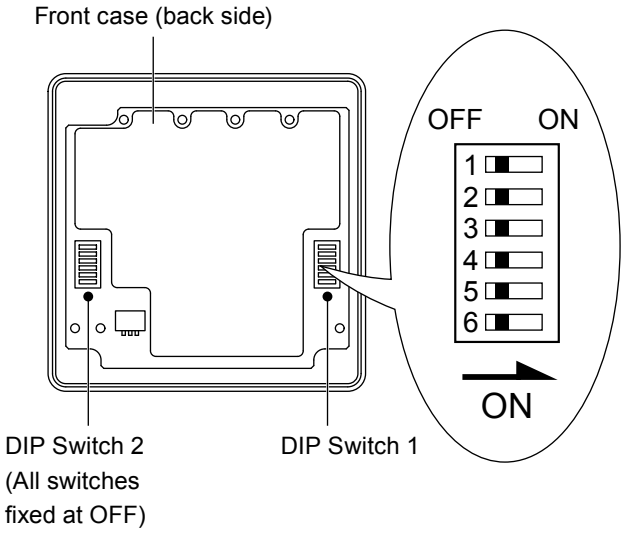

■ DIP SWITCH 1 SETTING

DIP Switch 1	SW1	Forbidden*
	SW2	Dual remote controller setting
	SW3	Forbidden*
	SW4	Forbidden*
	SW5	Forbidden*
	SW6	Memory backup setting

*Switches are fixed at OFF.

● Dual remote controller setting

Set the remote controller SW2 according to the following table.

(◆··· Factory setting)

	Number of remote controller	Primary unit	Secondary unit
		SW2	SW2
◆	1 (Normal)	OFF	—
	2 (Dual)	OFF	ON

● Memory backup setting

Set to ON to use batteries for the memory backup. If batteries are not used, all of the settings stored in memory will be deleted if there is a power failure.

(◆··· Factory setting)

	SW6	Memory backup
◆	OFF	Invalidity
	ON	Validity

13. OPTIONAL PARTS

13-1. CONTROLLER

Exterior	Parts name	Model No.	Summary
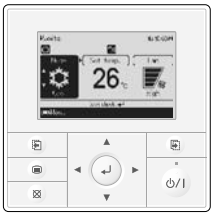	Wired remote controller	UTY-RVN∗M	Large and full-dot liquid crystal screen, wide and large keys easy to press, user-intuitive arrow key.
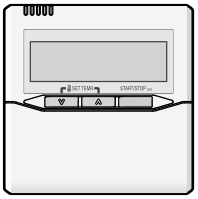	Wired remote controller	UTY-RNN∗M	The room temperature can be controlled by detecting the temperature accurately with built-in thermo sensor.
	Simple remote controller	UTY-RSN∗M	Compact remote controller concentrates on the basic functions such as Start/Stop, Fan Control, Temperature Setting and Operation mode.
	IR receiver unit	UTY-LRH∗M	Unit control is performed by wireless remote controller.

DUCT TYPE
AR✱G30-36LMLE

13-2. OTHERS

Exterior	Parts name	Model No.	Summary
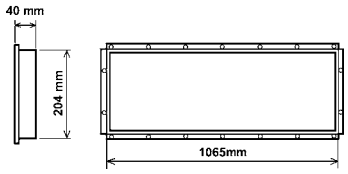	Square flange	UTD-SF045T	Both the **Square flange** and the **Round flange** can be selected. **Round flange** is also used when the fresh air duct is installed
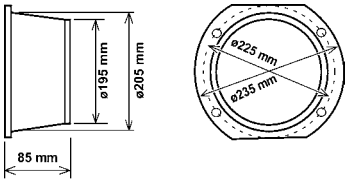	Round flange	UTD-RF204	
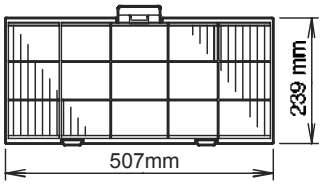	Long-life filter	UTD-LF25NA	**Long-life filter** can be mounted to the indoor unit.
	Remote sensor	UTY-XSZX	New amenity space can be offered by installing the **Remote sensor** in the remote controller.
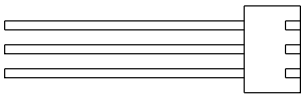	External control set	UTD-ECS5A	Use to connect with various peripheral devices and air conditioner PC board.
	Drain pump unit	UTZ - PX1NBA	Optional drain lift up mechanism allows more flexible installation.

2. OUTDOOR UNIT

SINGLE TYPE :

AO∗G30LETL
AO∗G36LETL

DTR_AO135E_01
2013.02.28

CONTENTS

2. OUTDOOR UNIT

OUTDOOR UNIT
AO∗G30-36LETL

1. SPECIFICATIONS

Type				INVERTER HEATPUMP	
Model name				AO∗G30LETL	AO∗G36LETL
Power source				230V ~ 50Hz	
Available voltage range				198-264V ~ 50Hz	
Starting current			A	12.2	13.7
Fan	Airflow rate	Cooling	m^3/h	3600	3800
		Heating		3600	3800
	Type × Q'ty			Propeller × 1	
	Motor output		W	100	100
Sound pressure level		Cooling	dB(A)	53	54
		Heating		55	55
Sound power level		Cooling	dB(A)	68	69
		Heating		69	70
Heat exchanger type		Dimensions (H × W × D)	mm	798 × 900 × 36.4	798 × 900 × 36.4
		Fin pitch		1.30	1.30
		Rows x Stages		2 × 38	2 × 38
		Pipe type		Copper	
		Fin type		Aluminium	
Compressor	Type × Q'ty			Twin Rotary × 1	
	Motor output		W	2100	
Refrigerant		Type (Global Warming Potential)		R410A (1975)	
		Charge	g	2100	
Refrigerant oil		Type		POE (RB68)	
Enclosure		Material		Steel sheet	
		Colour		BEIGE Approximate colour of MUNSELL 10YR 7.5/1.0	
Dimensions (H×W×D)	Net		mm	830 × 900 × 330	
	Gross			970 × 1050 × 445	
Weight	Net		kg	61	
	Gross			68	
Connection pipe	Size	Liquid	mm	Ø 9.52 (Ø 3/8 in.)	
		Gas		Ø 15.88 (Ø 5/8 in.)	
	Method			Flare	
	Pre-charge length		m	20	
	Max. length			50	
	Max. height difference			30	
Operation range		Cooling	˚C	-15 to 46	
		Heating		-15 to 24	

Note :
Specifications are based on the following conditions.
Cooling : Indoor temperature of 27 °CDB / 19 °CWB.and outdoor temperature of 35 °CDB/24 °CWB.
Heating : Indoor temperature of 20 °CDB / 15 °CWB.and outdoor temperature of 7 °CDB/6 °CWB.
Pipe length : 5 m, Height difference : 0 m.(Outdoor unit - Indoor unit)
The protective function may work when using it outside the operation range.

OUTDOOR UNIT
AO∗G30-36LETL

2. DIMENSIONS

■ MODELS: AO∗G30LETL, AO∗G36LETL

(Unit : mm)

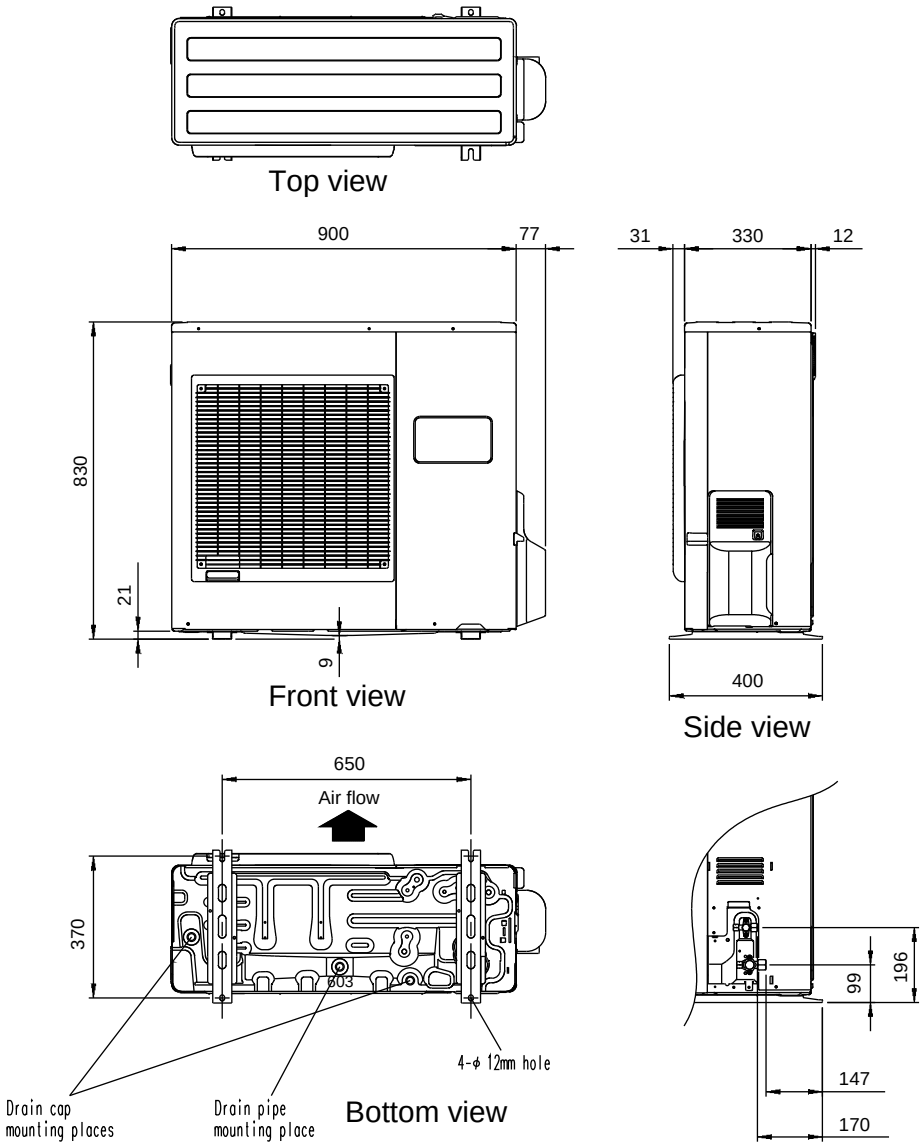

■ INSTALLATION PLACE

When there are obstacles at the back or front sides.

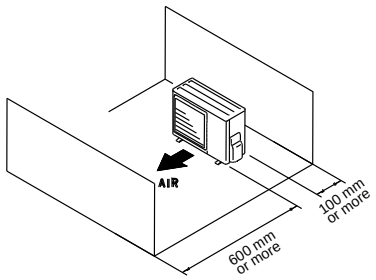

When there are obstacles at the back, side(s), and top.

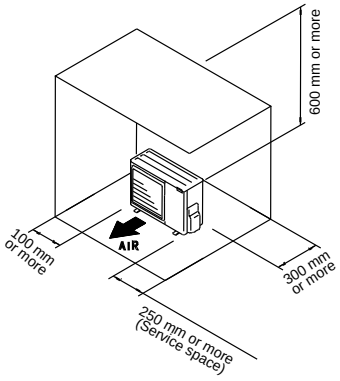

When there are obstacles at the back, side with the installation of more than one unit.

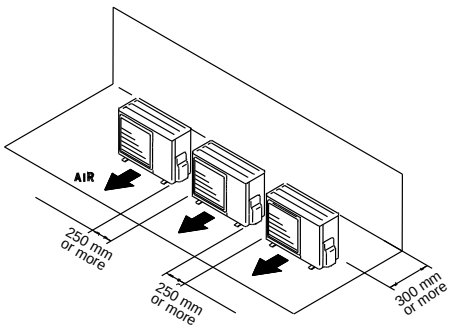

If the space is larger than stated, the condition will be the same as those without any obstacles.

3. REFRIGERANT CIRCUIT

■ MODELS: AO∗G30LETL, AO∗G36LETL

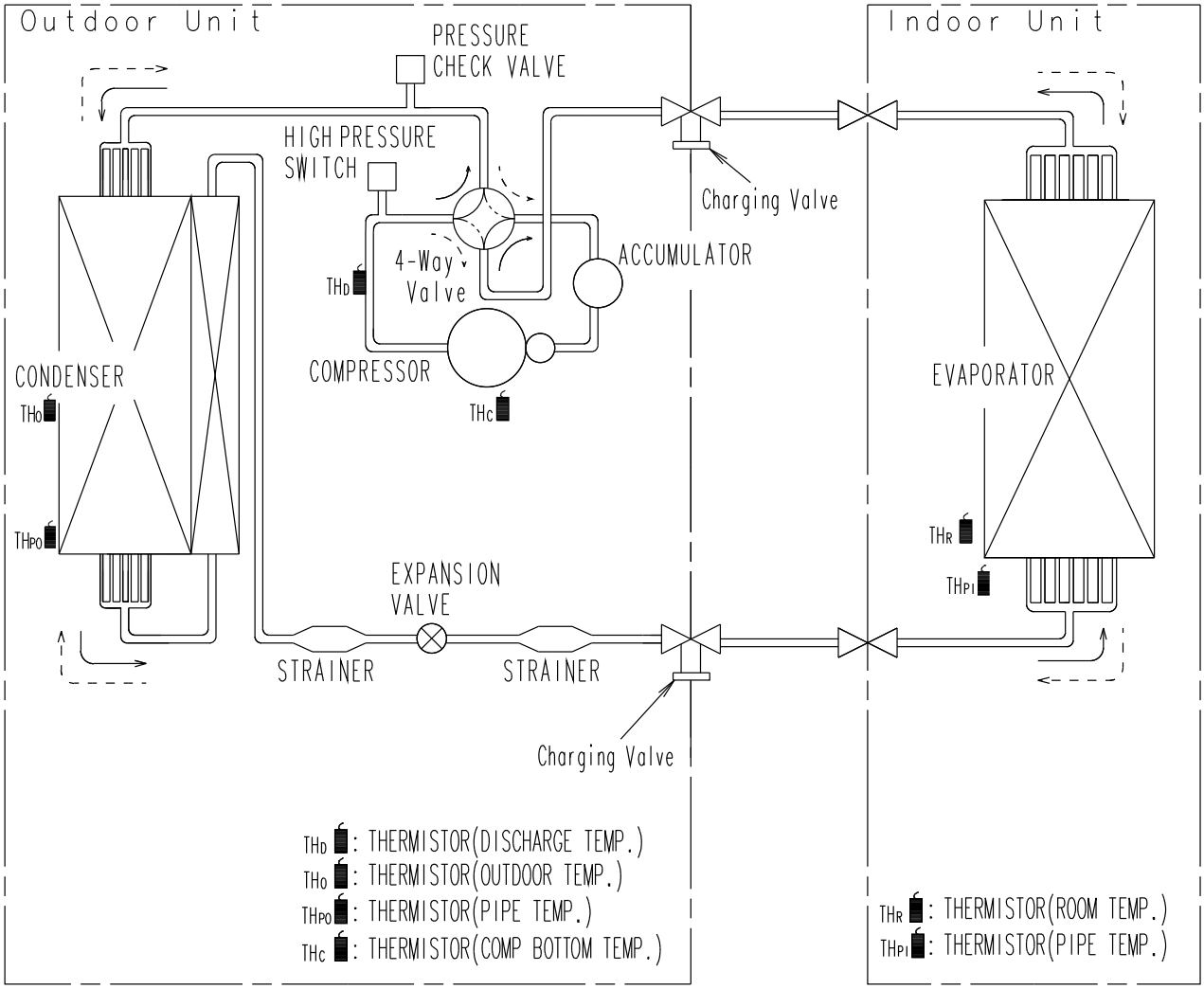

Refrigerant direction

⟶ : Cooling

- - -> : Heating

Refrigerant pipe diameter
Liquid : 9.52 mm (3/8")
Gas : 15.88 mm (5/8")

OUTDOOR UNIT
AO∗G30-36LETL

4. WIRING DIAGRAMS

■ MODEL: AO∗G30LETL

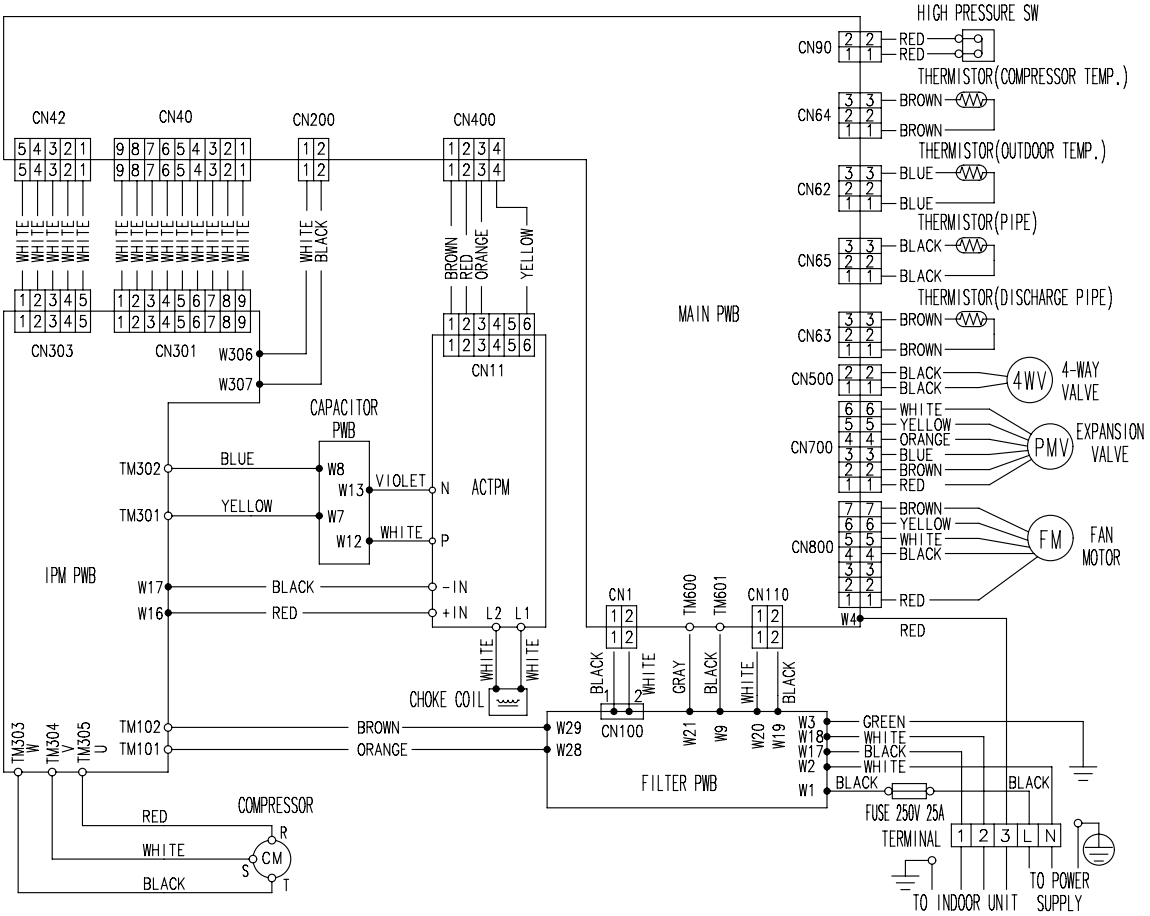

■MODEL: AO*G36LETL

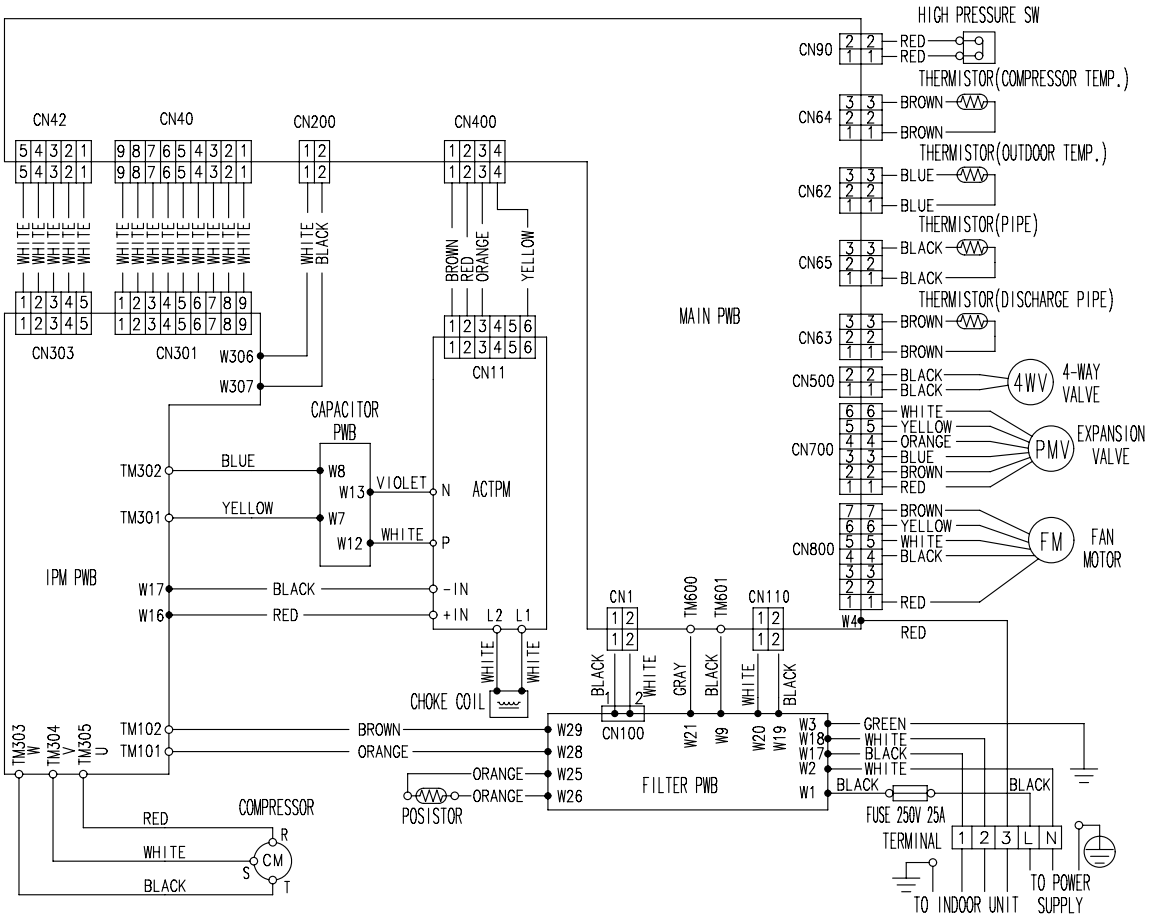

OUTDOOR UNIT
AO*G30-36LETL

5. CAPACITY COMPENSATION RATE FOR PIPE LENGTH AND HEIGHT DIFFERENCE

■ MODELS: AO∗G30LETL, AO∗G36LETL

COOLING			Pipe length (m)						
			5	7.5	10	20	30	40	50
Height difference H (m)	∗1 Indoor unit is higher than outdoor unit	30	-	-	-	-	0.908	0.894	0.876
		20	-	-	-	0.935	0.923	0.909	0.891
		10	-	-	0.968	0.951	0.938	0.924	0.906
		7.5	-	0.982	0.972	0.954	0.942	0.928	0.909
		5	0.992	0.986	0.976	0.958	0.946	0.932	0.913
		0	1.000	0.994	0.983	0.966	0.954	0.939	0.920
	∗2 Indoor unit is lower than outdoor unit	-5	1.000	0.994	0.983	0.966	0.954	0.939	0.920
		-7.5	-	0.994	0.983	0.966	0.954	0.939	0.920
		-10	-	-	0.983	0.966	0.954	0.939	0.920
		-20	-	-	-	0.966	0.954	0.939	0.920
		-30	-	-	-	-	0.954	0.939	0.920

HEATING			Pipe length (m)						
			5	7.5	10	20	30	40	50
Height difference H (m)	∗1 Indoor unit is higher than outdoor unit	30	-	-	-	-	0.931	0.914	0.899
		20	-	-	-	0.954	0.931	0.914	0.899
		10	-	-	0.990	0.954	0.931	0.914	0.899
		7.5	-	0.991	0.990	0.954	0.931	0.914	0.899
		5	1.000	0.991	0.990	0.954	0.931	0.914	0.899
		0	1.000	0.991	0.990	0.954	0.931	0.914	0.899
	∗2 Indoor unit is lower than outdoor unit	-5	0.995	0.986	0.986	0.949	0.926	0.909	0.895
		-7.5	-	0.983	0.983	0.946	0.924	0.907	0.892
		-10	-	-	0.981	0.944	0.921	0.904	0.890
		-20	-	-	-	0.935	0.912	0.895	0.881
		-30	-	-	-	-	0.903	0.886	0.872

Height difference H

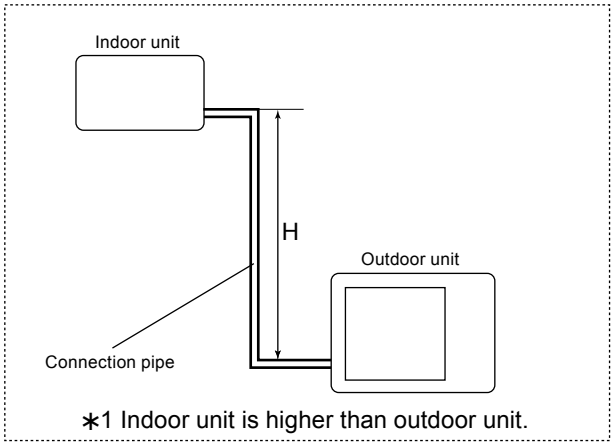

∗1 Indoor unit is higher than outdoor unit.

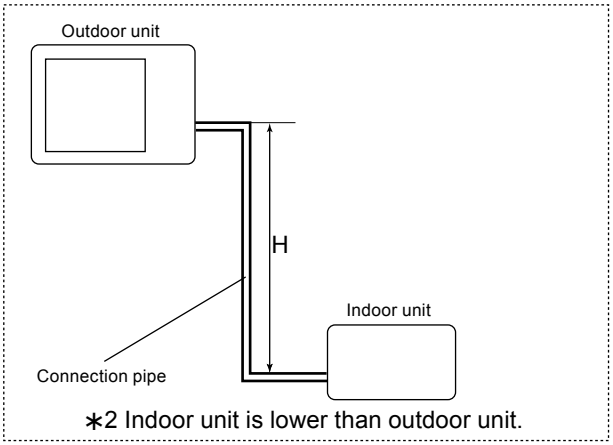

∗2 Indoor unit is lower than outdoor unit.

6. ADDITIONAL CHARGE CALCULATION

■ MODELS: AO∗G30LETL, AO∗G36LETL

Refrigerant type		R410A
Refrigerant amount	g	2100

● Refrigerant Charge

Total pipe length	m	20 or less	30	40	50 (MAX)	40g/m
Additional charge	g	0	400	800	1200	

OUTDOOR UNIT
AO∗G30-36LETL

7. AIRFLOW

■ MODEL: AO∗G30LETL

● COOLING

Number of rotations (r.p.m)	Airflow	
850	m^3/h	3600
	l/s	1000
	CFM	2119

● HEATING

Number of rotations (r.p.m)	Airflow	
850	m^3/h	3600
	l/s	1000
	CFM	2119

■ MODEL: AO∗G36LETL

● COOLING

Number of rotations (r.p.m)	Airflow	
900	m^3/h	3800
	l/s	1056
	CFM	2236

● HEATING

Number of rotations (r.p.m)	Airflow	
900	m^3/h	3800
	l/s	1056
	CFM	2236

OUTDOOR UNIT
AO∗G30-36LETL

8. OPERATION NOISE (SOUND PRESSURE)

8-1. NOISE LEVEL CURVE

■ MODEL: AO∗G30LETL

● COOLING

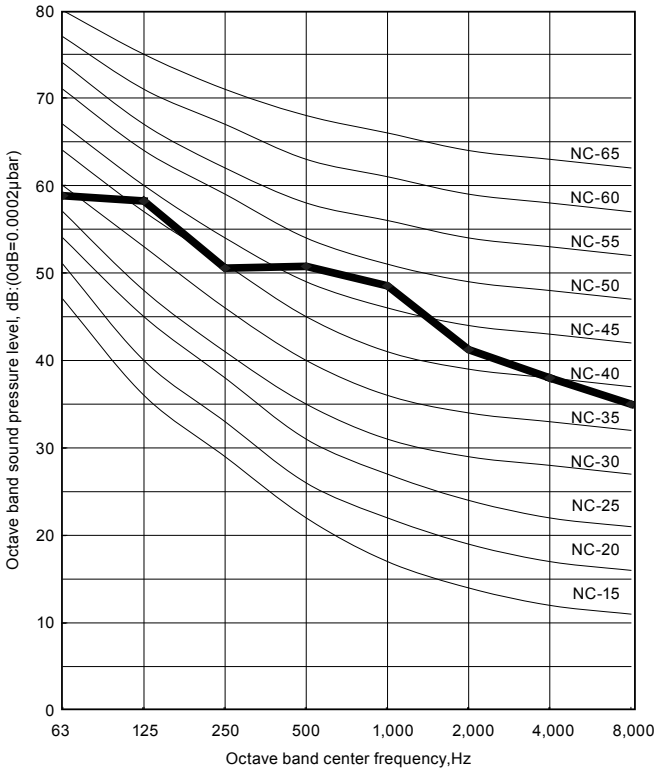

● HEATING

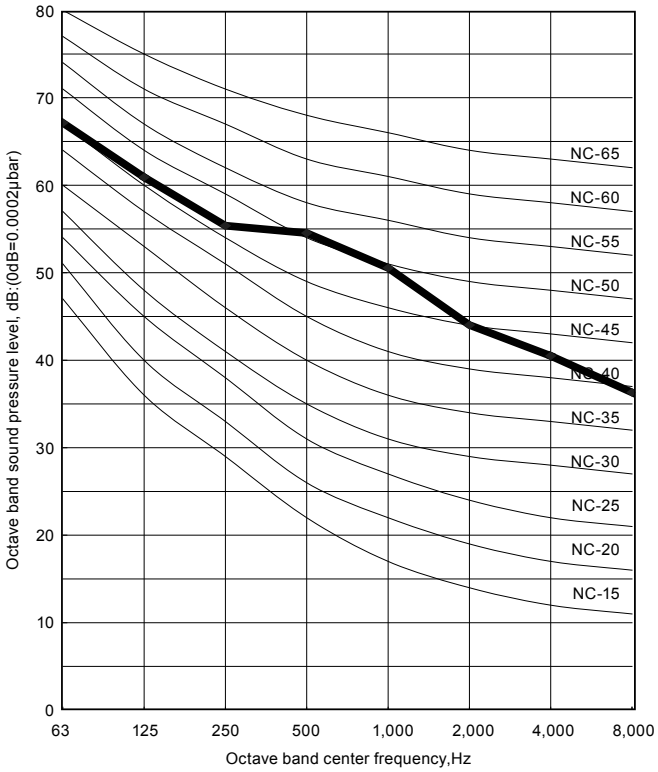

■ MODEL: AO∗G36LETL

● COOLING

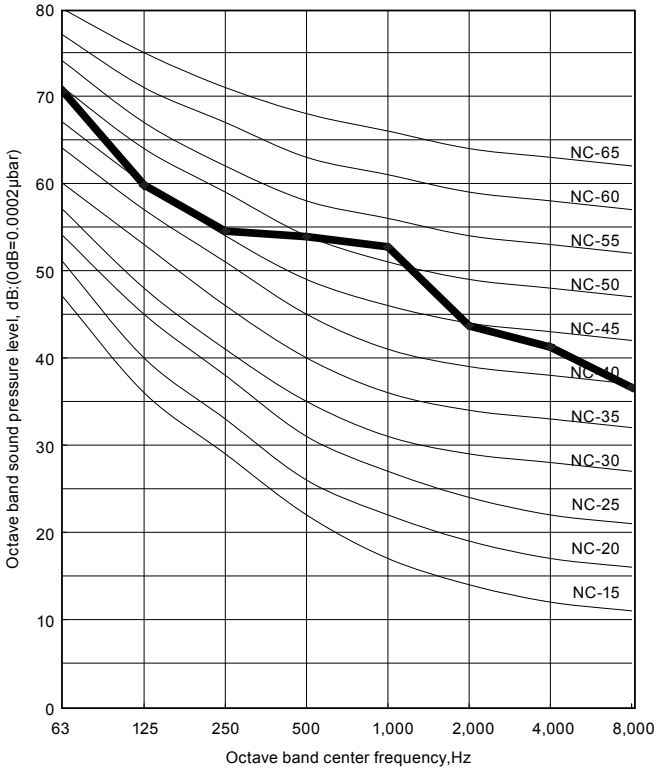

● HEATING

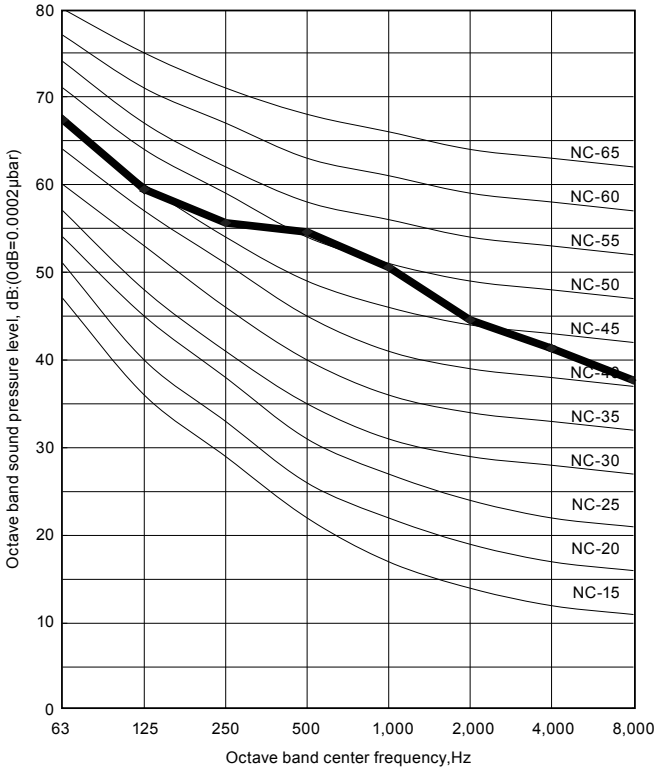

8-2. SOUND LEVEL CHECK POINT

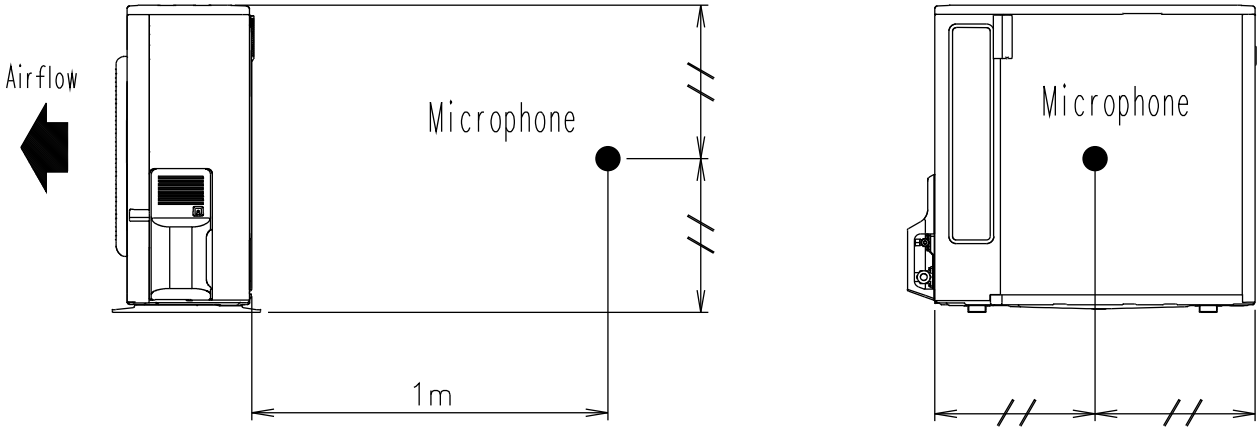

OUTDOOR UNIT
AO*G30-36LETL

9. ELECTRIC CHARACTERISTICS

Model name			AO∗G30LETL	AO∗G36LETL
Power supply	Voltage	V	230 ~	
	Frequency	Hz	50	
*1) Max. operating current		A	17.0	20.0
Starting current		A	12.2	13.7
*2) Wiring spec.	Main fuse (Circuit breaker) current	A	30	
	Power cable	mm^2	3.5	

*1) The maximum current is the total current of indoor unit and outdoor unit.

*2) Wiring spec.
Selected sample
(Selected based on Japan Electrotechnical Standards and Codes Committee E0005)

OUTDOOR UNIT
AO∗G30-36LETL

10. SAFETY DEVICES

	Protection form	Model	
		AO∗G30LETL	AO∗G36LETL
Circuit protection	Current fuse (Near the terminal)	250V 25A	
	Current fuse (Filter printed circuit board)	250V 10A	
	Current fuse (Main printed circuit board)	250V 3.15A	
Fan motor protection	Thermal protection program	OFF : 140±20°C ON : 110±20°C	
High pressure protection	Pressure switch	OFF : 4.2±0.1MPa ON : 3.2±0.15MPa	
Compressor protection	Thermal protection program (Compressor temp.)	OFF : 120°C ON : 80°C	
	Thermal protection program (Discharge temp.)	OFF : 110°C ON : After 7 minutes	

OUTDOOR UNIT
AO∗G30-36LETL