Split type room air conditioner
Duct type (50Hz)

FUJITSU

SERVICE MANUAL

Indoor unit	Outdoor unit
ARXG45KHTA	AOYG45KBTB
ARXG54KHTA	AOYG54KBTB

Refrigerant R32

CONTENTS

SPECIFICATIONS 1
DIMENSIONS 3
REFRIGERANT SYSTEM DIAGRAM. . .10
INDOOR PCB CIRCUIT DIAGRAM 11
OUTDOOR PCB CIRCUIT DIAGRAM. . .12
ERROR DETECTION 13
PARTS (INDOOR UNIT) 15
PARTS (OUTDOOR UNIT) 17
ACCESSORIES 22

FUJITSU GENERAL LIMITED

Specifications (Indoor unit)

Type					Duct	
					Inverter heat pump	
Model name					**ARXG45KHTA**	**ARXG54KHTA**
Power supply					230 V ~ 50 Hz	
Power supply intake					Outdoor unit	
Available voltage range					198—264 V	
Capacity	Cooling	Rated		kW	12.1	13.4
				Btu/h	41,300	45,700
		Min.—Max.		kW	4.0—14.0	5.0—14.5
				Btu/h	13,600—47,800	17,100—49,500
	Heating	Rated		kW	13.5	15.5
				Btu/h	46,100	52,900
		Min.—Max.		kW	5.0—16.2	5.5—18.0
				Btu/h	17,100—55,300	18,800—61,400
Input power	Cooling	Rated		kW	4.16	4.77
		Max.			4.77	4.98
	Heating	Rated			3.61	4.18
		Max.			4.88	5.25
Current	Cooling	Rated		A	18.2	20.9
	Heating	Rated			15.8	18.3
Power factor	Cooling			%	99.2	99.3
	Heating				99.2	99.3
EER		Cooling		kW/kW	2.91	2.81
COP		Heating			3.74	3.71
Moisture removal				L/h (pints/h)	1.5 (2.6)	2.0 (3.5)
Maximum operating current*1		Cooling		A	28.5	
		Heating			28.5	
Fan	Airflow rate	Cooling	HIGH	m^3/h	3,350	
			MED		2,850	
			LOW		2,430	
		Heating	HIGH		3,350	
			MED		2,850	
			LOW		2,430	
	Type × Q'ty				Sirocco fan × 2	
	Motor output			W	490	
Static pressure range				Pa	100 to 250	
Sound pressure level*2		Cooling	HIGH	dB (A)	47	
			MED		43	
			LOW		40	
		Heating	HIGH		47	
			MED		43	
			LOW		40	
Heat exchanger type		Dimensions (H × W × D)		mm	336 × 890 × 53.2	
		Fin pitch			1.3	
		Rows × Stages			4 × 16	
		Pipe type			Copper	
		Fin type			Aluminum	
Enclosure		Material			Steel sheet	
		Color			—	
Dimensions (H × W × D)		Net		mm	400 × 1,050 × 500	
		Gross			460 × 1,230 × 640	
Weight		Net		kg	46	
		Gross			51	
Connection pipe		Size	Liquid	mm (in)	Ø9.52 (3/8)	
			Gas		Ø15.88 (5/8)	
		Method			Flare	
Operation range		Cooling		°C	18 to 32	
				%RH	80 or less	
		Heating		°C	16 to 30	
Drain port		Material			Steel	
		Size		mm	Ø23.4 (I.D.), Ø25.4 (O.D.)	
Remote control (Option)					Wired remote controller, Wireless remote controller, Mobile app*3 (FGLair™)	

NOTES:

- Specifications are based on the following conditions:
  - Cooling: Indoor temperature of 27 °CDB/19 °CWB, and outdoor temperature of 35 °CDB/24 °CWB.
  - Heating: Indoor temperature of 20 °CDB/15 °CWB, and outdoor temperature of 7 °CDB/6 °CWB.
  - Pipe length: 5 m, Height difference: 0 m. (Between outdoor unit and indoor unit.)
  - Standard static pressure: 100 Pa
- Protective function might work when using it outside the operation range.
- *1: Maximum operating current is the total current of the indoor unit and the outdoor unit.
- *2: Sound pressure level:
  - Measured values in manufacturer's anechoic chamber.
  - Because of the surrounding sound environment, the sound levels measured in actual installation conditions might be higher than the specified values here.
- *3: Available on Google Play™ store or on App Store®. Optional WLAN adapter is also required. For details, refer to the setting manual.

Specifications (Outdoor unit)

Type				Inverter heat pump	
Model name				**AOYG45KBTB**	**AOYG54KBTB**
Power supply				230 V ~ 50 Hz	
Power supply intake				Outdoor unit	
Available voltage range				198—264 V	
Starting current			A	18.2	19.5
Fan	Airflow rate	Cooling	m^3/h	4,450	4,450
		Heating		4,450	4,450
	Type × Q'ty			Propeller × 1	
	Motor output		W	120	
Sound pressure level *1		Cooling	dB (A)	57	57
		Heating		57	59
Sound power level		Cooling	dB (A)	71	73
		Heating		71	73
Heat exchanger type		Dimensions (H × W × D)	mm	Main1: 966 × 905 × 18.2 Main2: 966 × 905 × 18.2 Sub: 966 × 543 × 18.2	
		Fin pitch		1.45	
		Rows × Stages		1 × 46	
		Pipe type		Copper	
		Fin	Type (Material)	Aluminum	
			Surface treatment	Blue fin	
Compressor	Type × Q'ty			DC Twin rotary × 1	
	Motor output		W	2,180	
Refrigerant		Type (Global warming potential)		R32 (675)	
		Factory charge	g	2,700	
Refrigerant oil		Type		RmM68AF	
		Amount	cm^3	800	
Enclosure		Material		Steel sheet	
		Color		Beige Approximate color of Munsell 10YR 7.5/1.0	
Dimensions (H × W × D)	Net		mm	998 × 940 × 320	
	Gross			1,176 × 1,027 × 445	
Weight	Net		kg	67	
	Gross			75	
Connection pipe	Size	Liquid	mm (in)	Ø9.52 (3/8)	
		Gas		Ø15.88 (5/8)	
	Method			Flare	
	Pre-charge length		m	30	
	Max. length			50	
	Max. height difference			30	
Operation range		Cooling	°C	-15 to 46	
		Heating		-15 to 24	
Drain hose		Material		LDPE	
		Size	mm	Ø13.0 (I. D.), Ø16.0 to Ø16.8 (O. D.)	

NOTES:

- Specifications are based on the following conditions:
  - Cooling: Indoor temperature of 27 °CDB/19 °CWB, and outdoor temperature of 35 °CDB/24 °CWB.
  - Heating: Indoor temperature of 20 °CDB/15 °CWB, and outdoor temperature of 7 °CDB/6 °CWB.
  - Pipe length: 5 m, Height difference: 0 m. (Between outdoor unit and indoor unit.)
- Protective function might work when using it outside the operation range.
- *1: Sound pressure level
  - Measured values in manufacturer's anechoic chamber.
  - Because of the surrounding sound environment, the sound levels measured in actual installation conditions might be higher than the specified values here.

Dimensions

Models: ARXG45KHTA and ARXG54KHTA

Unit: mm

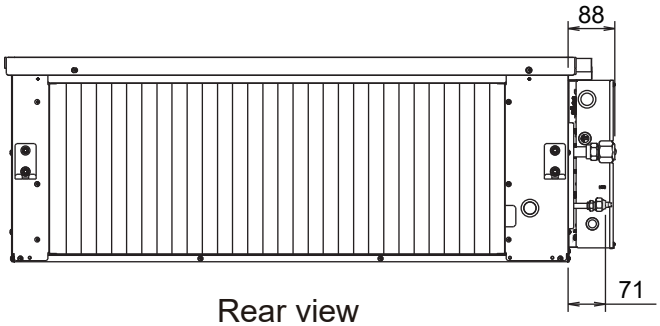

Rear view

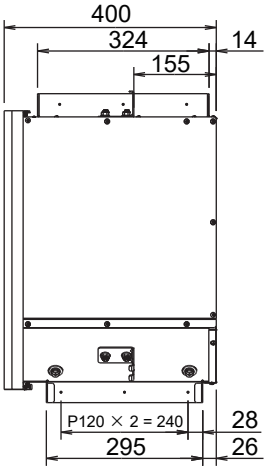

Side view (L)

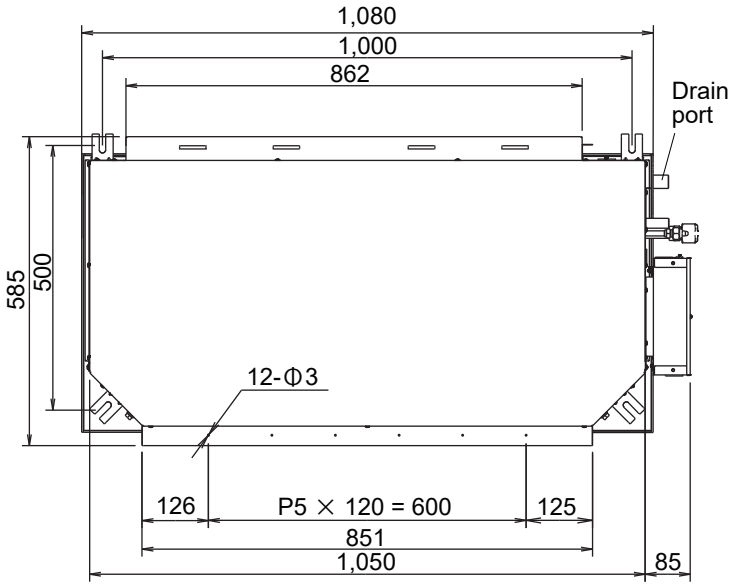

Top view

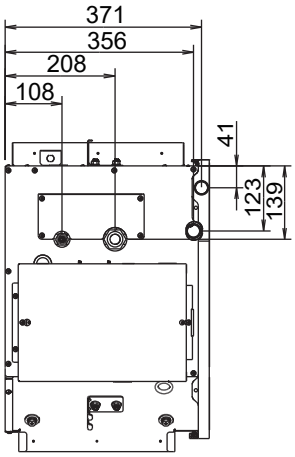

Side view (R)

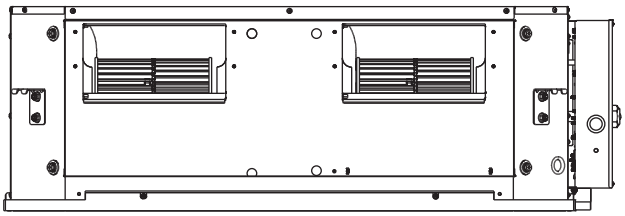

Front view

Installation space requirement

Provide sufficient installation space for product safety.

Models: ARXG45KHTA and ARXG54KHTA

Installation by which service space is mode on top of the unit (recommended).

Unit: mm

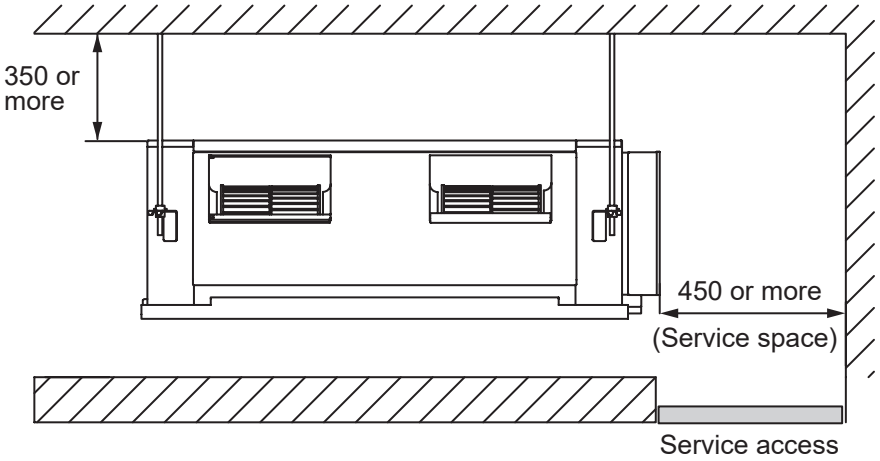

Installation by which service space is carried out from the bottom of the unit.

Unit: mm

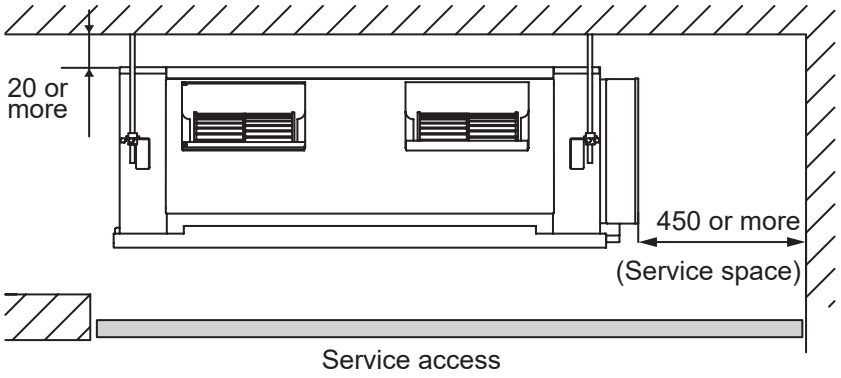

Maintenance space requirement

For future maintenance and service access, provide sufficient maintenance space.

NOTE: Do not place any wiring or illumination in the maintenance space, as they will impede service.

Models: ARXG45KHTA and ARXG54KHTA

Unit: mm

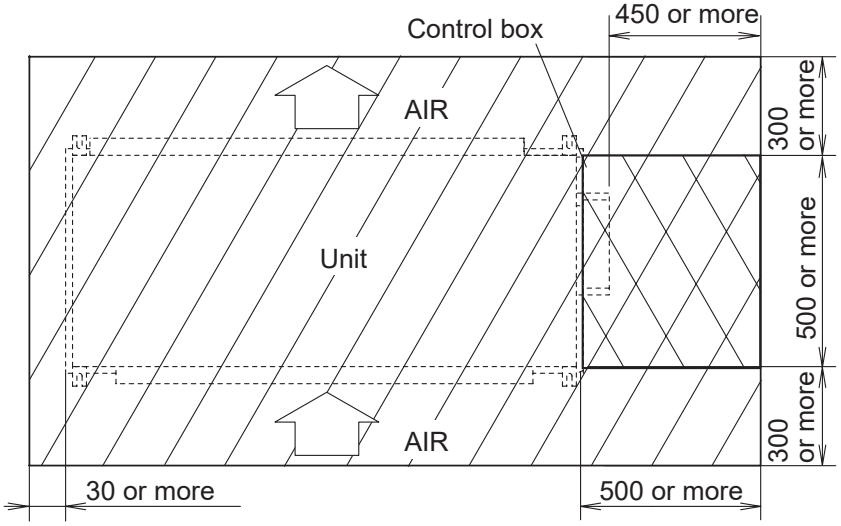

: Service access : Service space

Models: AOYG45KBTB and AOYG54KBTB

Unit: mm

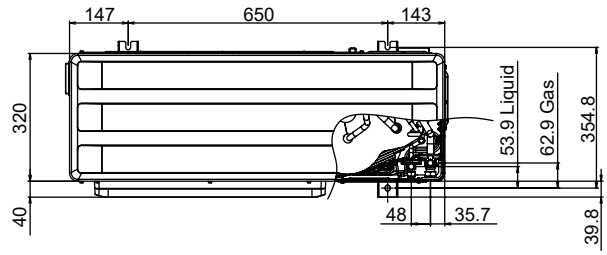

Top view

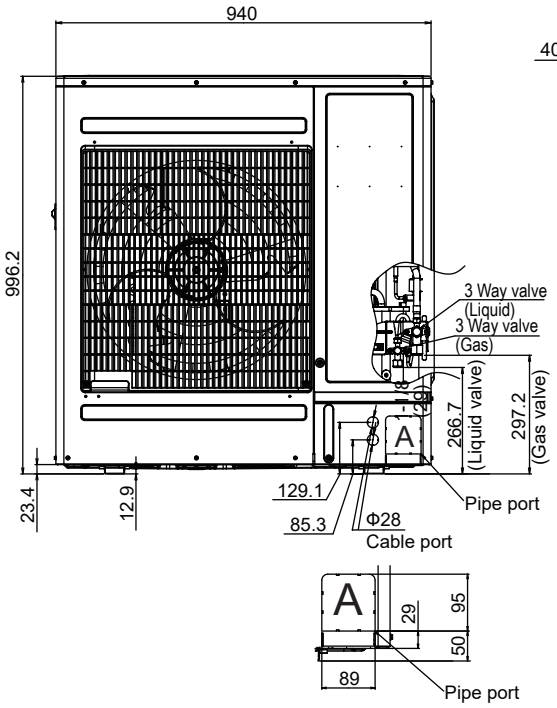

Front view

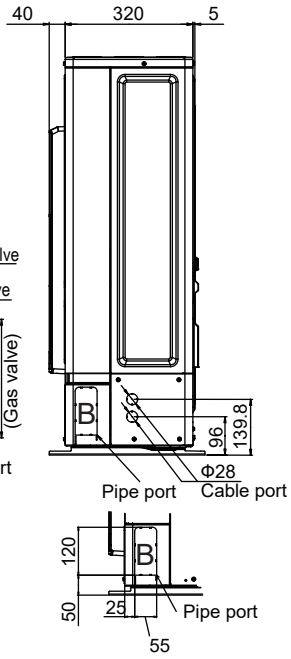

Side view

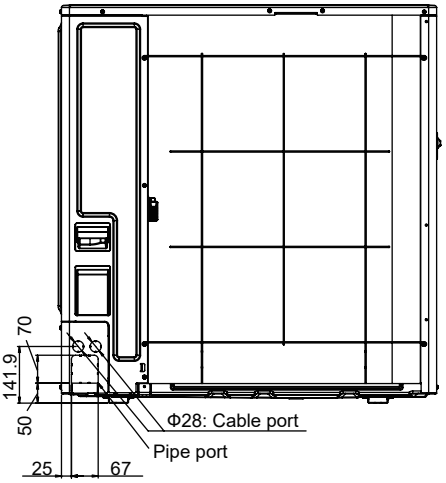

Rear view

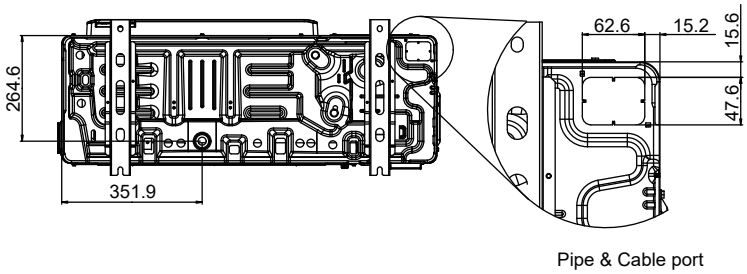

Bottom view

Installation space

Models: AOYG45KBTB and AOYG54KBTB

Space requirement

Provide sufficient installation space for product safety.

Single outdoor unit installation

- **When the upper space is open:**

Unit: mm

When there are obstacles at the rear only.

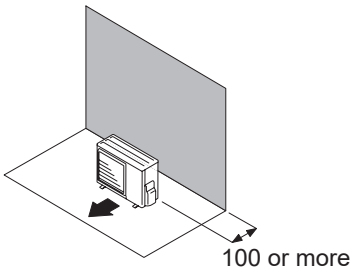

When there are obstacles at the rear and sides.

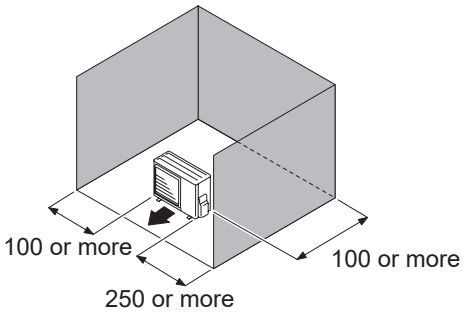

When there are obstacles at the front only.

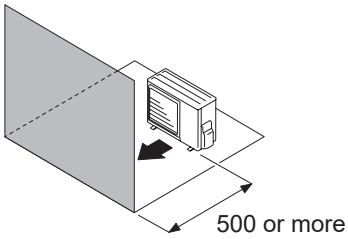

When there are obstacles at the front and rear.

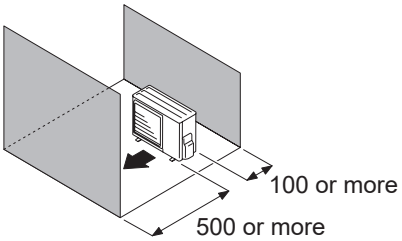

- **When there is an obstruction in the upper space:**

Unit: mm

When there are obstacles at the rear and above.

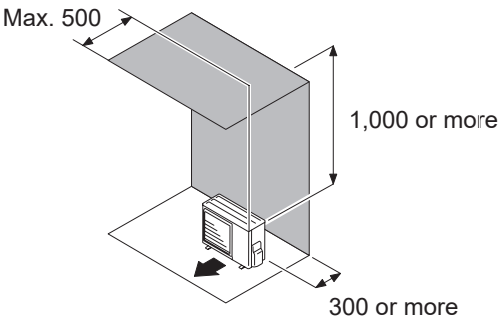

When there are obstacles at the rear, sides, and above.

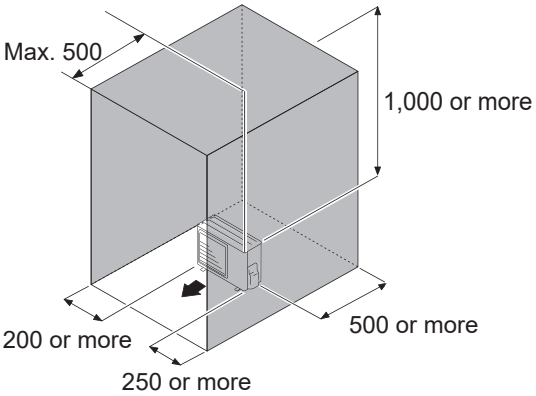

Multiple outdoor unit installation

- **When the upper space is open:**

Unit: mm

When there are obstacles at the rear only.

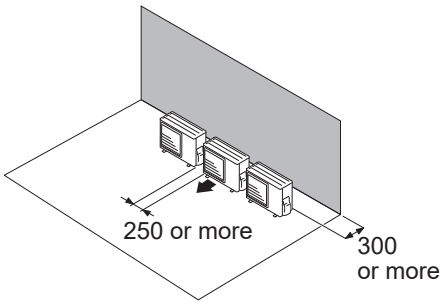

When there are obstacles at the front only.

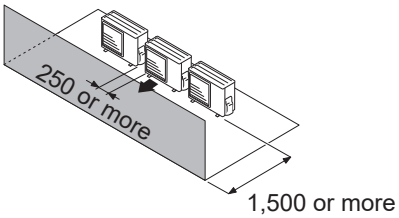

When there are obstacles at the front and rear.

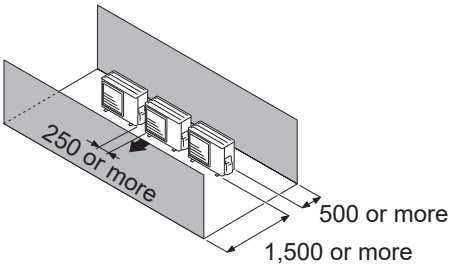

- **When there is an obstruction in the upper space:**

Unit: mm

When there are obstacles at the rear and above.

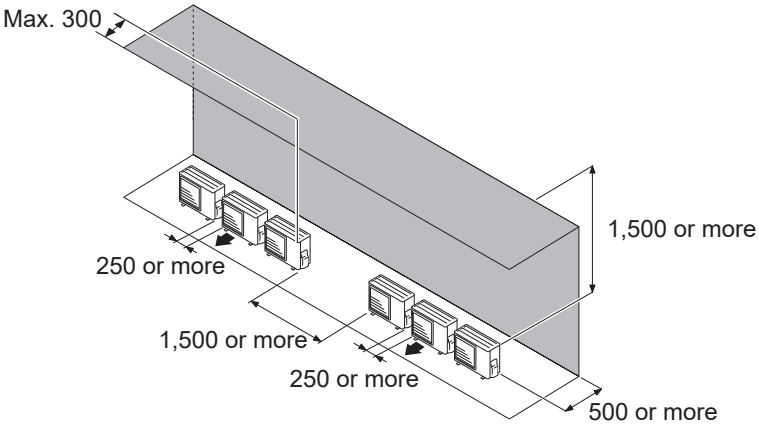

Outdoor unit installation in multi-row

Unit: mm

Single parallel unit arrangement

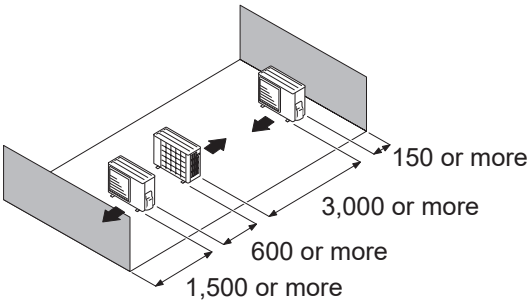

Multiple parallel unit arrangement

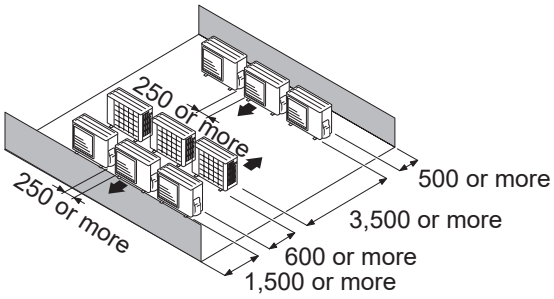

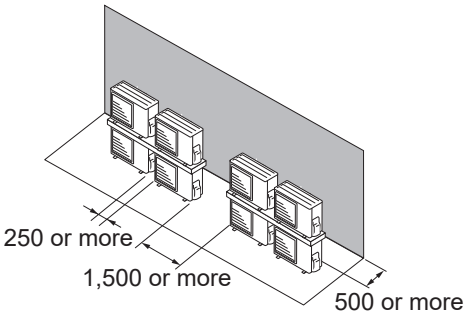

NOTES:

- If the space is larger than stated above, the condition will be the same as when there is no obstacle.
- Height above the floor level should be 50 mm or more.
- When installing the outdoor unit, be sure to open the front and left side to obtain better operation efficiency.

⚠ CAUTION

- Do not install the outdoor unit in two-stage where the drain water could freeze. Otherwise the drainage from the upper unit may form ice and cause a malfunction of the lower unit.
- When the outdoor temperature is 0 °C or less, do not use the accessory drain pipe and drain cap. If the drain pipe and drain cap are used, the drain water in the pipe may freeze in extremely cold climate. (For reverse cycle model only.)
- In area with heavy snowfall, if the inlet and outlet of the outdoor unit is blocked with snow, it might become difficult to get warm, and it is likely to cause product malfunction. Construct a canopy and a pedestal, or place the unit on a high stand that is locally installed.

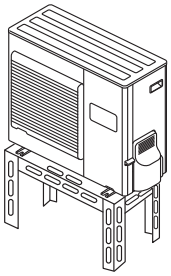

Refrigerant circuit

Models: AOYG45KBTB and AOYG54KBTB

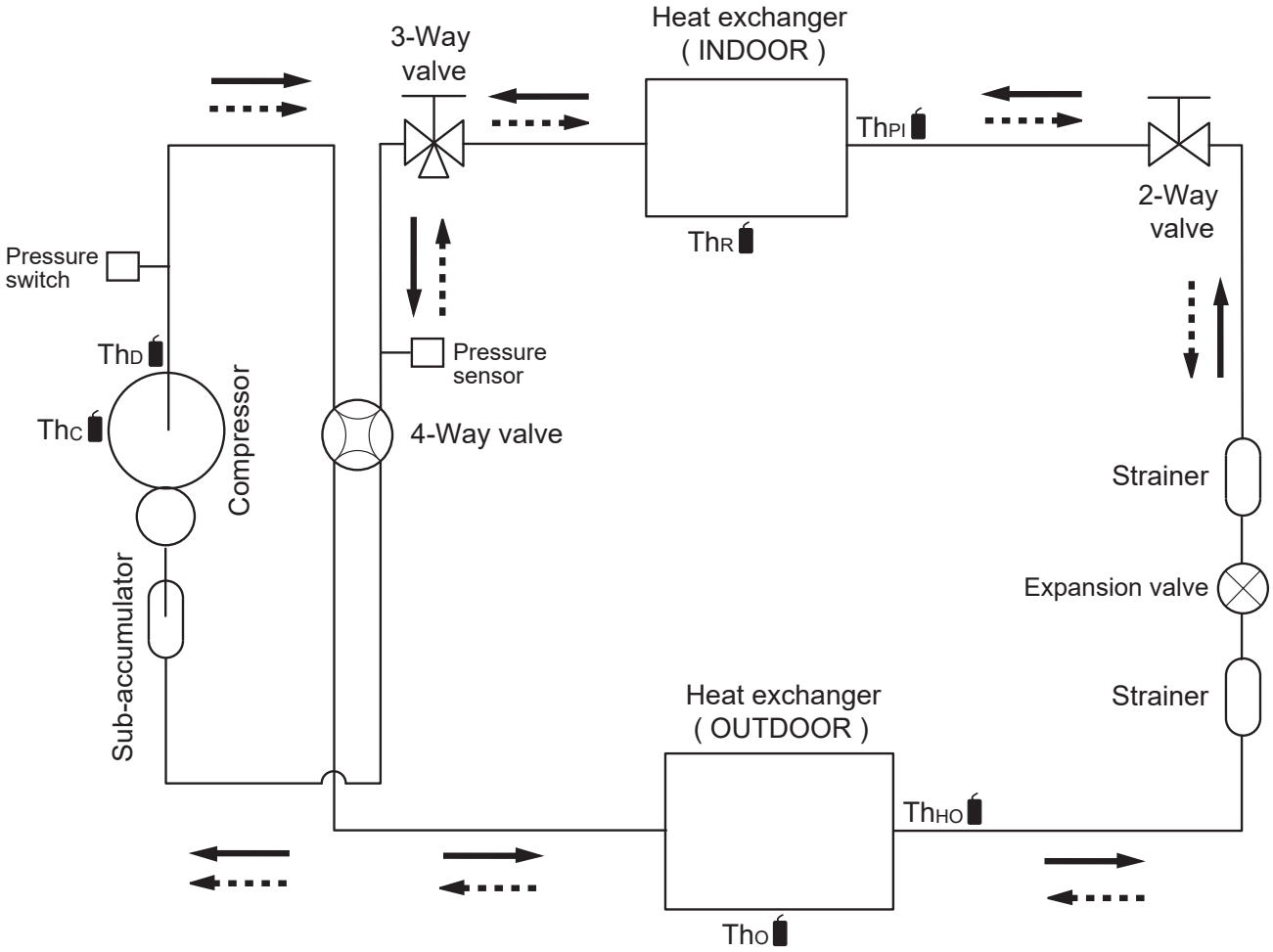

: Cooling
: Heating

ThC : Thermistor (Compressor temperature)
ThD : Thermistor (Discharge temperature)
ThO : Thermistor (Outdoor temperature)
ThHO : Thermistor (Heat Exchanger Out temperature)
ThR : Thermistor (Room temperature)
ThPI : Thermistor (Pipe temperature)

INDOOR PRINTED CIRCUIT BOARD
CIRCUIT DIAGRAM

Models : ARXG45KHTA
ARXG54KHTA

MAIN PCB
ARXG45KHTA : K03BZ-1801HSE-C1
ARXG54KHTA : K03BZ-1800HSE-C1

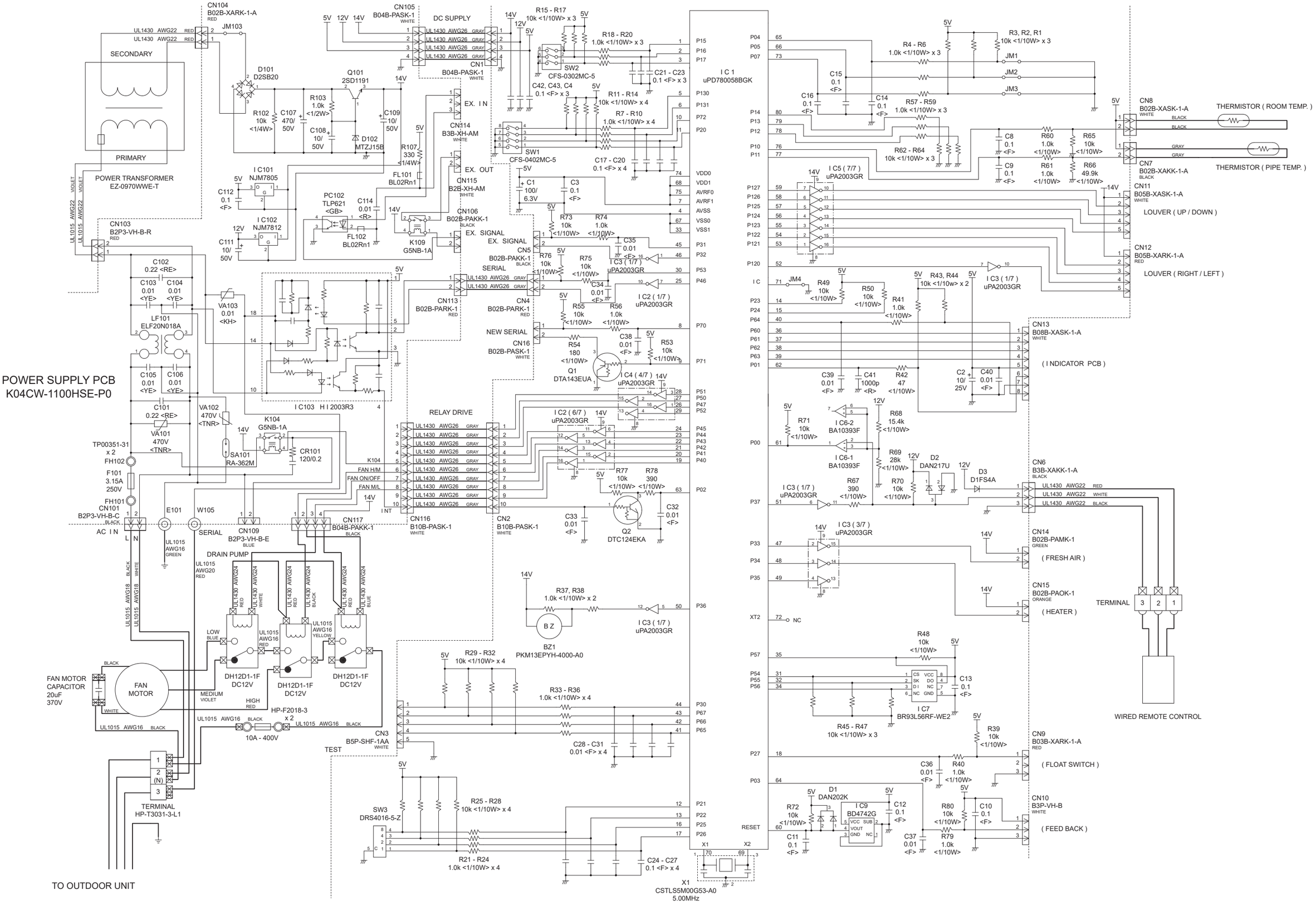

OUTDOOR PRINTED CIRCUIT BOARD
CIRCUIT DIAGRAM

Models : AOYG45KBTB
AOYG54KBTB

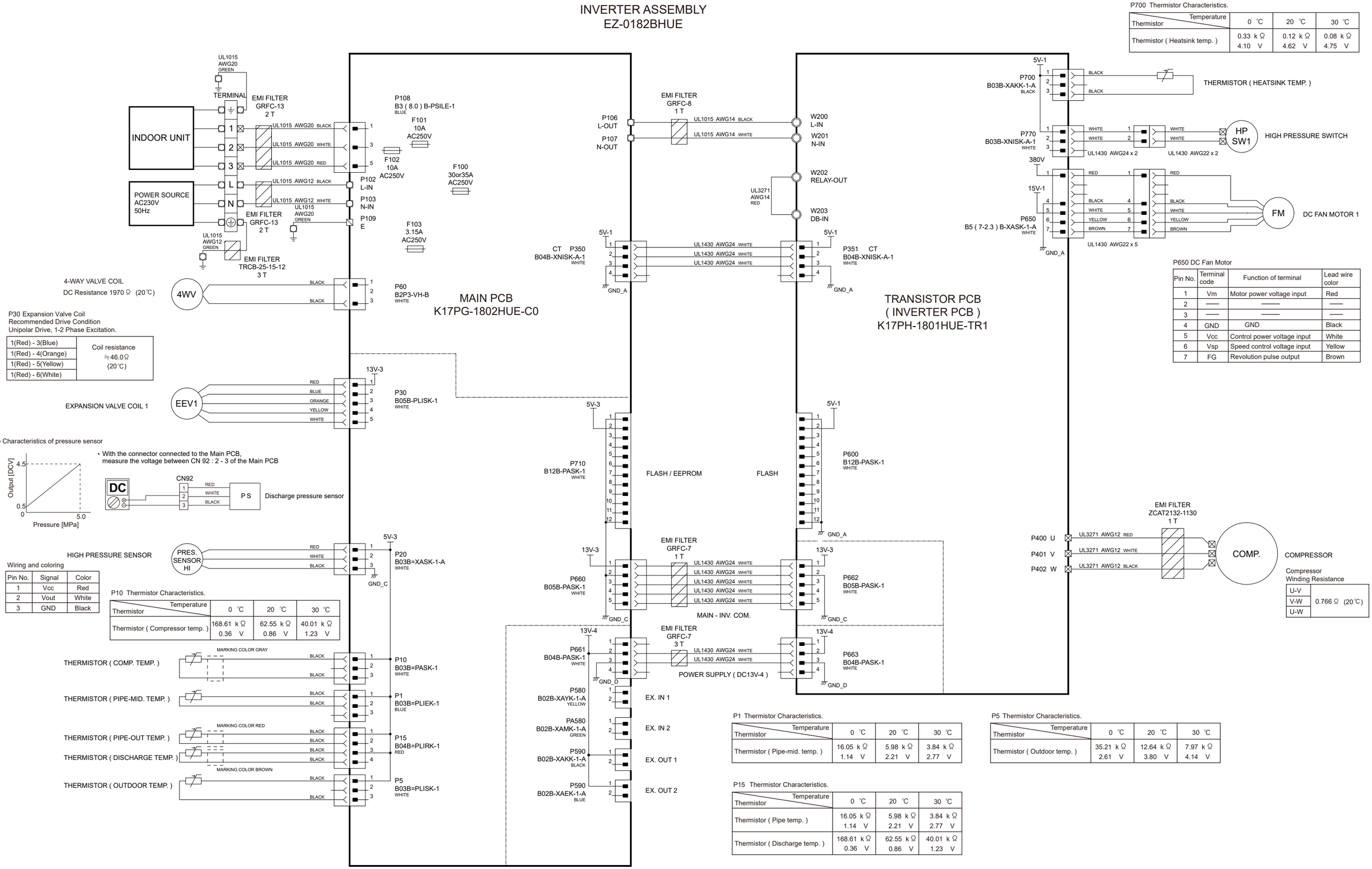

Error codes (Indoor unit)

[Error displays at the remote controller LCD]

This is possible only on the wired remote controller.

[Self-diagnosis]

If an error occurs, the following display will be shown.(“Er” will appear in the set room temperature display.)

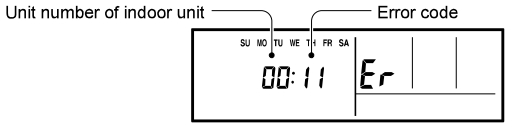

EX. Self-diagnosis

Wired remote controller Error code	Description
11	Serial communication error
12	Wired remote controller communication error
15	Check run unfinished
21	Unit number or Refrigerant circuit address setting error [Simultaneous Multi]
22	Indoor unit capacity error
23	Combination error
24	• Connection unit number error (indoor secondary unit) [Simultaneous Multi] • Connection unit number error (indoor unit or branch unit) [Flexible Multi]
27	Primary unit, secondary unit set-up error [Simultaneous Multi]
31	Power supply interruption error
32	Indoor unit PCB model information error
35	Manual auto switch error
41	Room temp. sensor error
42	Indoor unit Heat Ex. Middle temp. sensor error
51	Indoor unit fan motor error
53	Drain pump error
57	Damper error
5U	Indoor unit error
62	Outdoor unit main PCB model information error or communication error
63	Inverter error
64	Active filter error, PFC circuit error
65	Trip terminal L error
6A	Display PCB microcomputers communication error

Wired remote controller Error code	Description
71	Discharge temp. sensor error
72	Compressor temp. sensor error
73	Outdoor unit Heat Ex. liquid temp. sensor error
74	Outdoor temp. sensor error
75	Suction Gas temp. sensor error
76	• 2-way valve temp. sensor error • 3-way valve temp. sensor error
77	Heat sink temp. sensor error
82	• Sub-cool Heat Ex. gas inlet temp. sensor error • Sub-cool Heat Ex. gas outlet temp. sensor error
83	Liquid pipe temp. sensor error
84	Current sensor error
86	• Discharge pressure sensor error • Suction pressure sensor error • High pressure switch error
94	Trip detection
95	Compressor rotor position detection error (permanent stop)
97	Outdoor unit fan motor 1 error
98	Outdoor unit fan motor 2 error
99	4-way valve error
9A	Coil (expansion valve) error
A1	Discharge temp. error
A3	Compressor temp. error
A4	High pressure error
A5	Low pressure error
J2	Branch boxes error [Flexible Multi]

Error codes (Outdoor unit)

You can determine the operating status by the lighting on and blinking of the LED display.

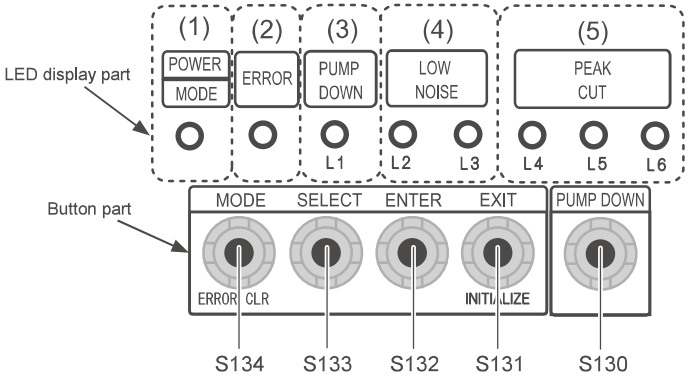

Error display mode

Display when an error occurs.

POWER/ MODE	ERROR	PUMP DOWN (L1)	LOW NOISE (L2)	LOW NOISE (L3)	PEAK CUT (L4)	PEAK CUT (L5)	PEAK CUT (L6)
●	Blink (Hi speed)	○	○	○	○	○	○

Sign "○": Lights off, "●": Lights on

(1) Check that the "ERROR" LED blinks, then press the [ENTER] button (S132) once.

10.2. Error code check table

DESCRIPTION	REMARK	LED display							
		POWER/ MODE	ERROR	PUMP DOWN (L1)	LOW NOISE (L2)	LOW NOISE (L3)	PEAK CUT (L4)	PEAK CUT (L5)	PEAK CUT (L6)
Serial communication error	Serial forward transmission error immediately after operation	Blink (2 times)	●	Blink (1 time)	Blink (1 time)	○	○	●	●
	Serial forward transmission error during operation	Blink (2 times)	●	Blink (1 time)	Blink (1 time)	○	●	○	○
Indoor unit capacity error	Indoor unit capacity error	Blink (2 times)	●	Blink (2 times)	Blink (2 times)	○	○	○	●
Indoor unit error	Indoor unit error	Blink (2 times)	●	Blink (5 times)	Blink (15 times)	○	○	○	●
Outdoor unit main PCB error	Outdoor unit PCB model information error	Blink (2 times)	●	Blink (6 times)	Blink (2 times)	○	○	○	●
Inverter PCB error	Inverter error	Blink (2 times)	●	Blink (6 times)	Blink (3 times)	○	○	○	●
IPM error	Trip terminal L error	Blink (2 times)	●	Blink (6 times)	Blink (5 times)	○	○	●	●
Discharge temp. sensor error	Discharge temp. sensor 1 error	Blink (2 times)	●	Blink (7 times)	Blink (1 time)	○	○	○	●
Compressor temp. sensor error	Compressor temp. sensor 1 error	Blink (2 times)	●	Blink (7 times)	Blink (2 times)	○	○	○	●
Outdoor unit Heat Ex. sensor error	Heat Ex. center temp. sensor error	Blink (2 times)	●	Blink (7 times)	Blink (3 times)	○	○	●	○
	Outdoor unit Heat Ex. liquid temp. sensor error	Blink (2 times)	●	Blink (7 times)	Blink (3 times)	○	○	●	●
Outdoor temp. sensor error	Outdoor temp. sensor error	Blink (2 times)	●	Blink (7 times)	Blink (4 times)	○	○	○	●
Heat sink temp. sensor error	Heat sink temp. sensor error	Blink (2 times)	●	Blink (7 times)	Blink (7 times)	○	○	○	●
Current sensor error	Current sensor 1 error (stoppage permanently)	Blink (2 times)	●	Blink (8 times)	Blink (4 times)	○	○	○	●
Pressure sensor error	High pressure switch 1 error	Blink (2 times)	●	Blink (8 times)	Blink (6 times)	○	●	○	○
	Pressure sensor error	Blink (2 times)	●	Blink (8 times)	Blink (6 times)	○	●	●	○
Trip detection	Trip detection	Blink (2 times)	●	Blink (9 times)	Blink (4 times)	○	○	○	●
Compressor motor control error	Rotor position detection error (stoppage permanently)	Blink (2 times)	●	Blink (9 times)	Blink (5 times)	○	○	○	●
Outdoor unit fan motor 1 error	Duty abnormal	Blink (2 times)	●	Blink (9 times)	Blink (7 times)	○	○	●	●
Outdoor unit fan motor 2 error	Duty abnormal	Blink (2 times)	●	Blink (9 times)	Blink (8 times)	○	○	●	●
4-way valve error	4-way valve error	Blink (2 times)	●	Blink (9 times)	Blink (9 times)	○	○	○	●
Discharge temp. 1 error	Discharge temp. 1 error	Blink (2 times)	●	Blink (10 times)	Blink (1 time)	○	○	○	●
Compressor temp. error	Compressor 1 temp. error	Blink (2 times)	●	Blink (10 times)	Blink (3 times)	○	○	○	●
Pressure error 2	Low pressure error	Blink (2 times)	●	Blink (10 times)	Blink (5 times)	○	○	○	●
IPM error	Temp. error	Blink (2 times)	●	Blink (6 times)	Blink (5 times)	○	○	○	●
Heat sink temp. error	Heat sink temp. error	Blink (2 times)	●	Blink (10 times)	Blink (12 times)	○	○	●	●

Parts

INDOOR UNIT
ARXG45KHTA
ARXG54KHTA

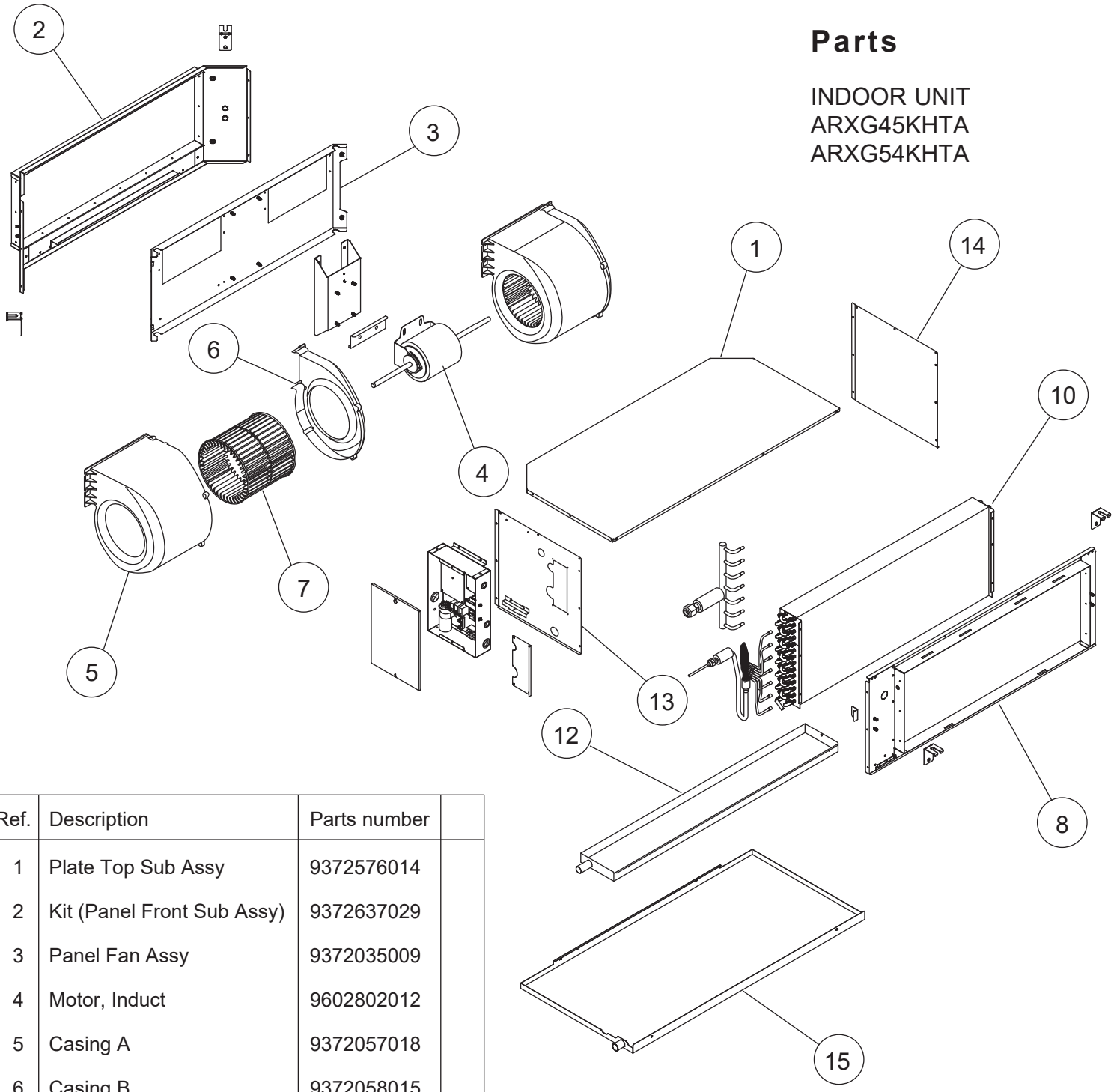

Ref.	Description	Parts number	
1	Plate Top Sub Assy	9372576014	
2	Kit (Panel Front Sub Assy)	9372637029	
3	Panel Fan Assy	9372035009	
4	Motor, Induct	9602802012	
5	Casing A	9372057018	
6	Casing B	9372058015	
7	Sirocco Fan	9372059029	
8	Kit (Panel Rear Sub Assy)	9372636022	
9	Room Thermistor	9703299216	
10	Evaporator Sub Assy	9372584248	
11	Pipe Thermistor	9900814069	
12	Drain Pan Assy	9372579015	
13	Kit (Panel Right Sub Assy)	9372916025	
14	Kit (Panel Left Sub Assy)	9372581018	
15	Drain Pan S Sub Assy	9372582015	

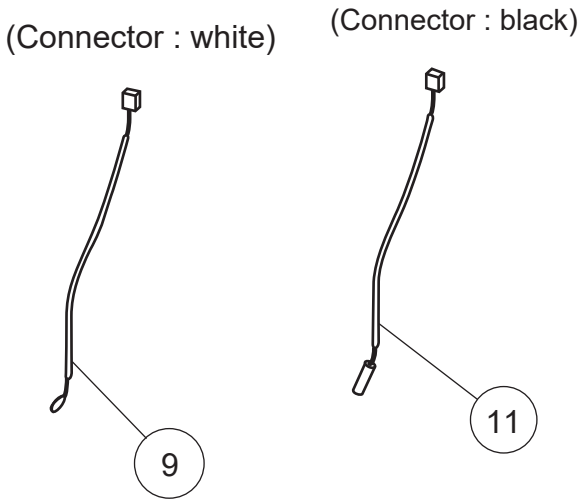

INDOOR UNIT
ARXG45KHTA
ARXG54KHTA

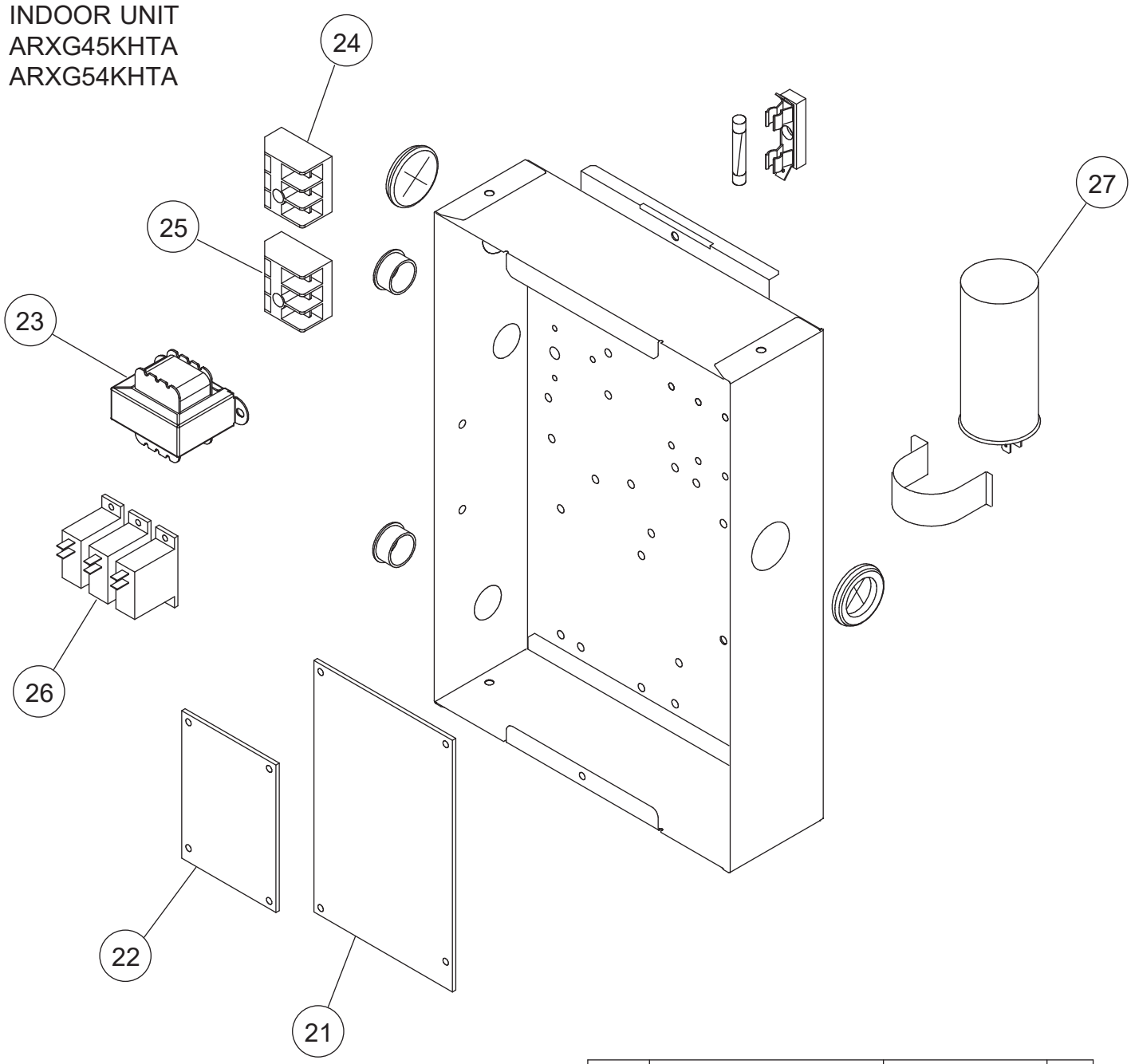

Ref.	Description	Parts number	
21	Power Supply PCB	9705668119	
22	Main PCB (45)	9705246355	
22	Main PCB (54)	9705246348	
23	Transformer (Power)	9704129017	
24	Terminal 3P	9703345012	
25	Terminal 3P	9306489045	
26	Relay	9900294014	
27	Capacitor, Plastic	9900269111	

OUTDOOR UNIT
AOYG45KBTB
AOYG54KBTB

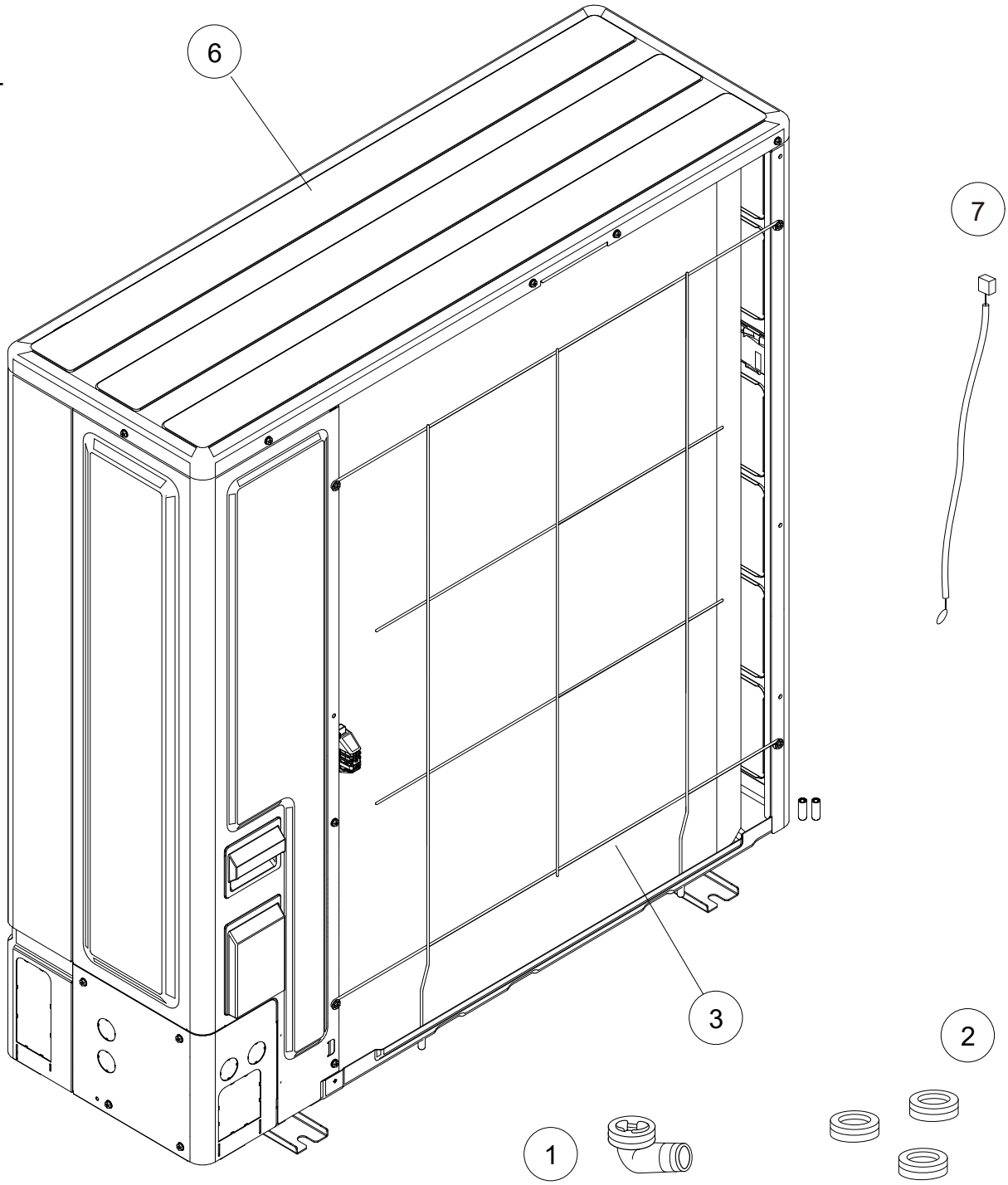

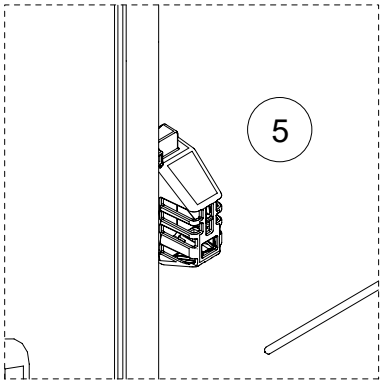

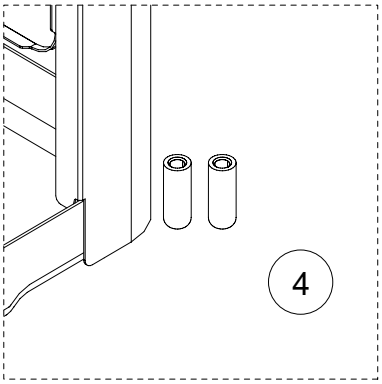

Ref.	Description	Parts number
1	Drain assy	9303029015
2	Drain cap	313166024302
3	Protective net rear	9381013005
4	Rubber (net)	9375361013
5	Thermo holder	9383607004
6	Top panel sub assy	9383880001
7	Outdoor Thermistor	9900565091

OUTDOOR UNIT
AOYG45KBTB
AOYG54KBTB

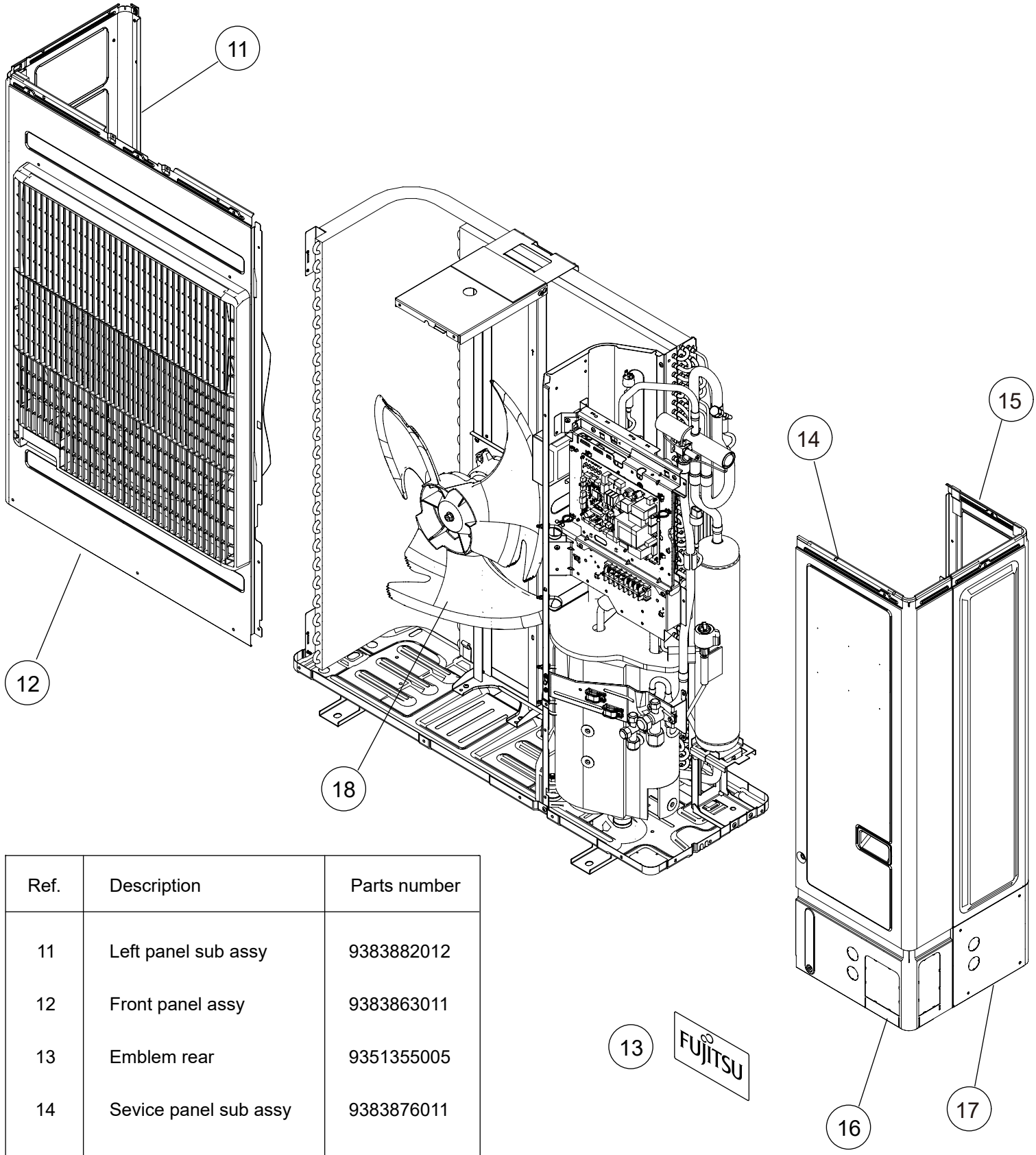

Ref.	Description	Parts number
11	Left panel sub assy	9383882012
12	Front panel assy	9383863011
13	Emblem rear	9351355005
14	Sevice panel sub assy	9383876011
15	Right panel sub assy	9383874017
16	Pipe cover front	9383878008
17	Pipe cover rear	9383879005
18	Propeller fan	9383336003

OUTDOOR UNIT
AOYG45KBTB
AOYG54KBTB

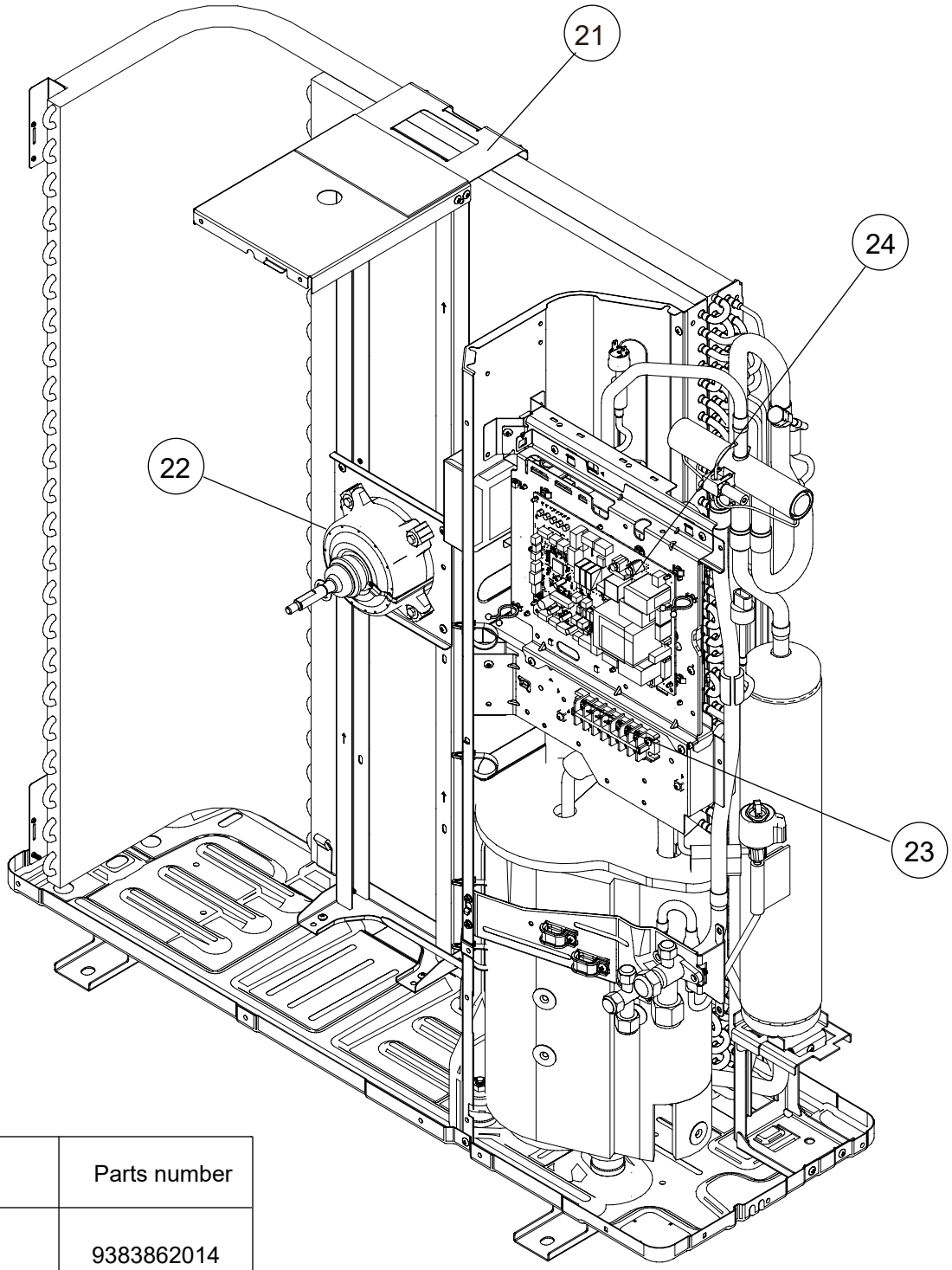

Ref.	Description	Parts number
21	Motor bracket assy	9383862014
22	Motor, DC Brushless	9603733018
23	Terminal 7P	9900203061
24	Main PCB (Service) (45)	9711431257
24	Main PCB (Service) (54)	9711431264
25	Inverter PCB	9709684115
--	Heat ex. thermistor	9900984038
--	Thermistor assy	9900727154
--	Compressor thermistor	9900985028

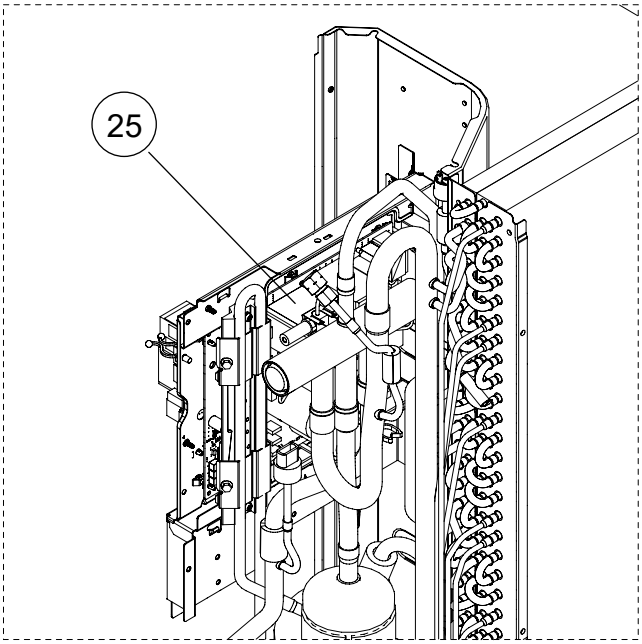

OUTDOOR UNIT
AOYG45KBTB
AOYG54KBTB

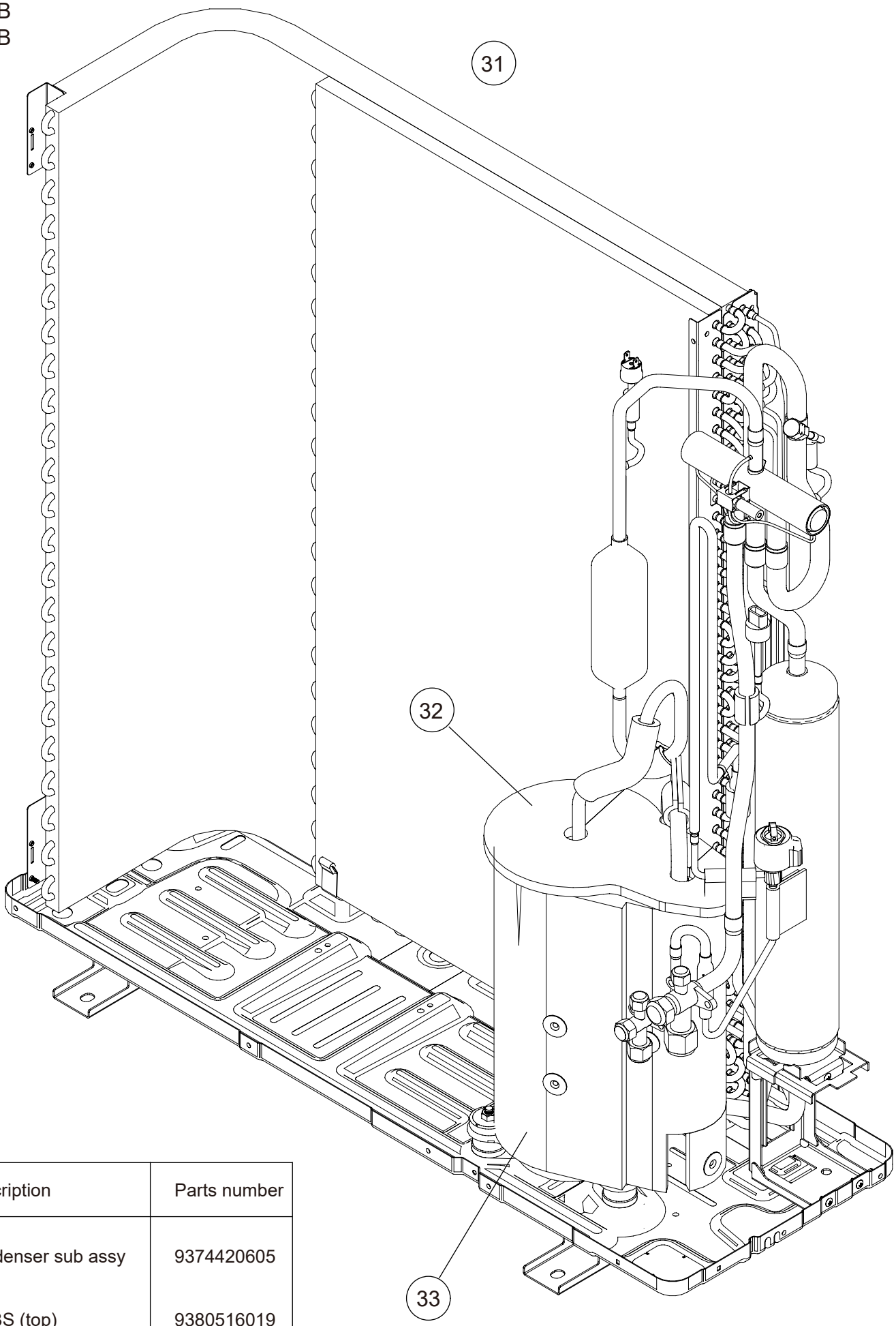

Ref.	Description	Parts number
31	Condenser sub assy	9374420605
32	S-ABS (top)	9380516019
33	S-ABS (body)	9379647168

OUTDOOR UNIT
AOYG45KBTB
AOYG54KBTB

Ref.	Description	Parts number
41	Compressor	9810620002
42	Accumulator assy	9375250133
43	Solenoid	9970194016
44	4-way valve assy	9374425624
45	pressure switch	9900186029
46	Sensor	9970158018
47	Expansion valve coil	9970209000
48	Expansion valve assy	9370947311
49	3-way valve assy	9377958037
50	3-way valve assy	9379079013

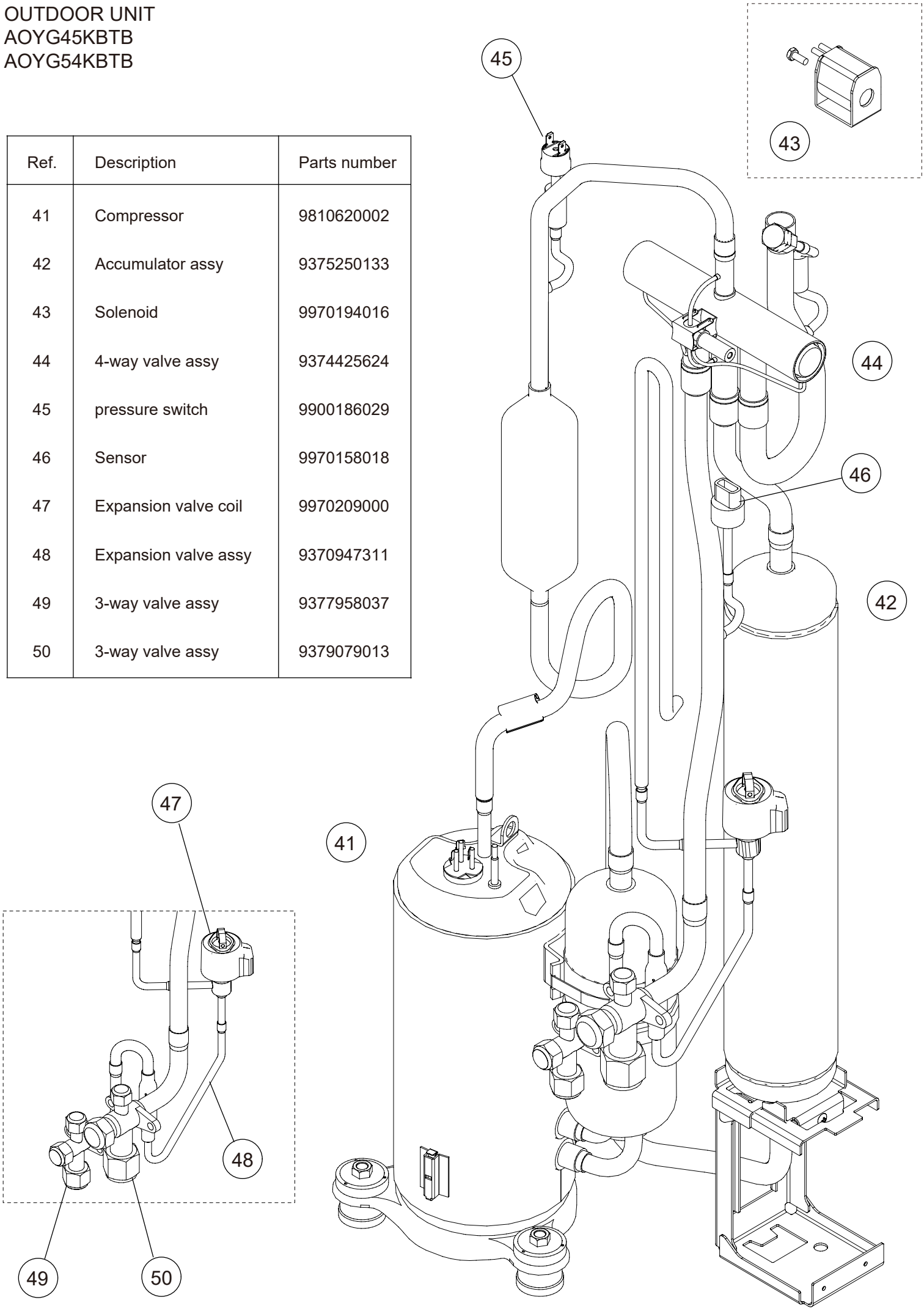

Accessories

Models: ARXG45KHTA and ARXG54KHTA

Part name	Exterior	Q’ty	Part name	Exterior	Q’ty
Operating manual		1	Coupler heat insulation (small)		1
Operating manual (CD-ROM)		1	Special nut A (large flange)		4
Installation manual		1	Special nut B (small flange)		4
Coupler heat insulation (large)		1			

Optional parts

1. Controllers

Exterior	Part name	Model name	Summary
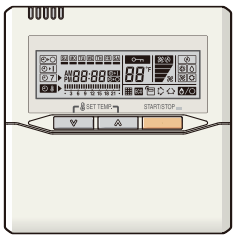	Wired remote controller	UTY-RNNYM	Room temperature can be controlled by detecting the temperature accurately with built-in thermo sensor. Wire type: Polar 3-wire
	Simple remote controller	UTY-RSNYM	Compact remote controller concentrates on the basic functions such as Start/Stop, fan control, temperature setting, and operation mode. Wire type: Polar 3-wire

NOTES:

- Available functions may differ by the remote controller. For details, refer to the operation manual.
- In this product, group controlling system of the wired remote controller is prohibited.

2. Others

Exterior	Part name	Model name	Summary
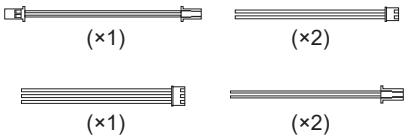	External connect kit	UTD-ECS5A	Use to connect with various peripheral devices and air conditioner PCB. (Set of 6)
	Remote sensor unit	UTY-XSZX	Thermo-sensor for sensing the temperature of arbitrary place in the room.
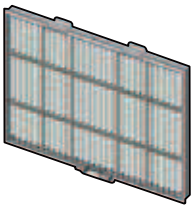	Long-life filter	UTD-LF60KA	Long-life filter can be mounted to the indoor unit.
	Wireless LAN adapter	UTY-TFNXZ1	Remotely manage an air conditioning system using mobile devices such as smartphones and tablets.

Accessories

Models: AOYG45KBTB and AOYG54KBTB

Part name	Exterior	Q'ty	Part name	Exterior	Q'ty
Installation manual		1	Drain cap		3
Drain pipe		1	One-touch bush		2

Optional parts

Exterior	Part name	Model name	Summary
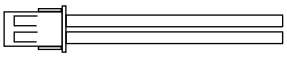	External connect kit	UTY-XWZXZ3	Use to operate the external input and output functions of outdoor unit.

1907G4854