FUJITSU

SPLIT TYPE
ROOM AIR CONDITIONER
WALL MOUNTED TYPE

# SERVICE MANUAL

Refrigerant
R410A

| Indoor unit | Outdoor unit |
|---|---|
| ASYG07LECA | AOYG07LEC |
| ASYG09LECA | AOYG09LEC |

## CONTENTS


SPECIFICATIONS . . . . . 1
DIMENSIONS . . . . . 2
REFRIGERANT SYSTEM DIAGRAM . . . . 3
CIRCUIT DIAGRAM . . . . . 4
INDOOR PCB CIRCUIT DIAGRAM . . . . . 5
OUTDOOR PCB CIRCUIT DIAGRAM . . . 9
ERROR DETECTION . . . . . 11
PARTS (INDOOR UNIT) . . . . . 13
PARTS (OUTDOOR UNIT) . . . . . 17
ACCESSORIES . . . . . 20


FUJITSU GENERAL LIMITED

# SPECIFICATIONS

## ELECTRICAL DATA

| TYPE | | Cool & heat inverter | |
|---|---|---|---|
| INDOOR UNIT | | ASYG07LECA | ASYG09LECA |
| OUTDOOR UNIT | | AOYG07LEC | AOYG09LEC |
| COOLING CAPACITY | | 2.10 kW | 2.50 kW |
| HEATING CAPACITY | | 3.00 kW | 3.20 kW |
| POWER SOURCE | | 230 V | 230 V |
| FREQUENCY | | 50 Hz | 50 Hz |
| RUNNING CURRENT | Cooling | 2.7 A | 3.5 A |
| | Heating | 3.5 A | 3.8 A |
| INPUT WATTS | Cooling | 0.470 kW | 0.640 kW |
| | Heating | 0.685 kW | 0.750 kW |
| E.E.R. | Cooling | 4.47 kW/kW | 3.91 kW/kW |
| COP | Heating | 4.38 kW/kW | 4.27 kW/kW |
| MOISTURE REMOVAL | | 1.3 L/h | |
| AIR CIRCULATION HIGH | Cooling | 690 $m^3$/h | |
| | Heating | 710 $m^3$/h | |
| MAXIMUM CURRENT | Cooling | 6.0 A | |
| | Heating | 7.5 A | |

## FAN MOTOR

| POWER SOURCE | | 230 V |
|---|---|---|
| INDOOR UNIT Cooling | High speed | 1,400 r.p.m. |
| | Middle speed | 1,200 r.p.m. |
| | Low speed | 920 r.p.m. |
| | Quiet | 620 r.p.m. |
| INDOOR UNIT Heating | High speed | 1,440 r.p.m. |
| | Middle speed | 1,200 r.p.m. |
| | Low speed | 980 r.p.m. |
| | Quiet | 670 r.p.m. |
| OUTDOOR UNIT Cooling | | 730 r.p.m. |
| OUTDOOR UNIT Heating | | 650 r.p.m. |

## NOISE LEVEL

| INDOOR UNIT Cooling | High speed | 43 dB |
|---|---|---|
| | Middle speed | 38 dB |
| | Low speed | 31 dB |
| | Quiet | 21 dB |
| INDOOR UNIT Heating | High speed | 43 dB |
| | Middle speed | 38 dB |
| | Low speed | 31 dB |
| | Quiet | 21 dB |
| OUTDOOR UNIT Cooling | | 45 dB |
| OUTDOOR UNIT Heating | | 45 dB |

## COMPRESSOR AND REFRIGERANT

| COMPRESSOR TYPE | | Hermetic type, 4 pole, 3 phase, DC inverter motor, Rotary |
|---|---|---|
| DISCRIMINATION | | 5SS072XAA |
| WEIGHT (with oil) | | 5.9 kg |
| PRECHARGED REFRIGERANT | | 650 g |
| REFRIGERANT TYPE | | R410A |
| FULL CHARGE Pipe length | 15 m | 650 g |
| | 20 m | 750 g |
| ADDITIONAL REFRIGERANT | | 20 g/m |
| MAXIMUM PIPING HEIGHT | | 15m |

## DIMENSIONS

| INDOOR UNIT H x W x D | 260 x 790 x 198 mm |
|---|---|
| OUTDOOR UNIT H x W x D | 540 x 660 x 290 mm |

## WEIGHT

| INDOOR UNIT Shipping / Net | 9.5 kg / 7.5 kg |
|---|---|
| OUTDOOR UNIT Shipping / Net | 26 kg / 23 kg |

# DIMENSIONS

unit : mm

INDOOR UNIT

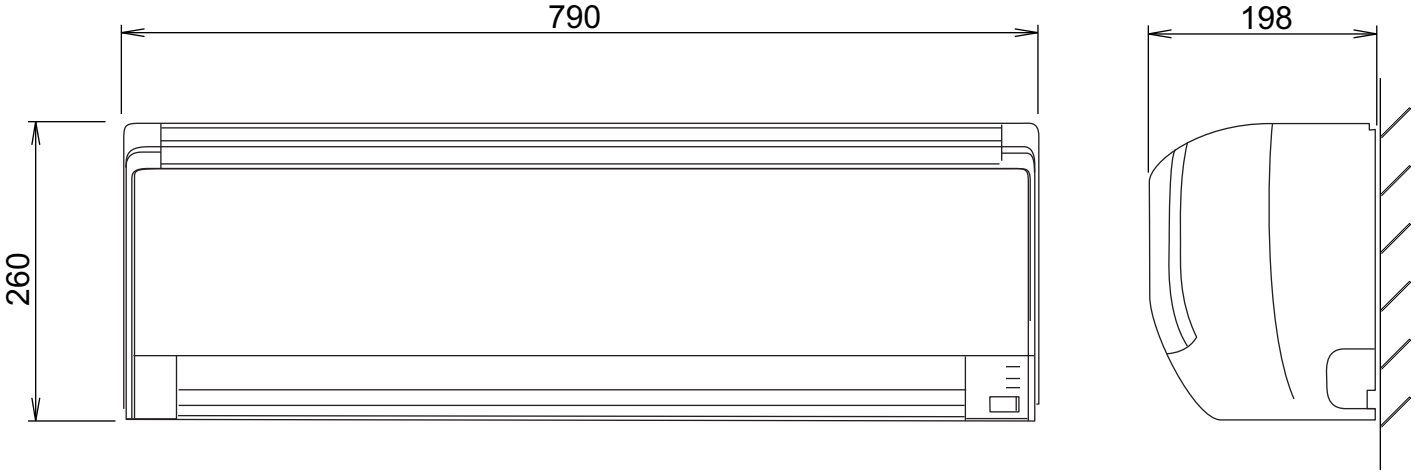


Drain pipe diameter
16.2 mm

Liquid pipe diameter : 6.35 mm
Gas pipe diameter : 9.52 mm

OUTDOOR UNIT

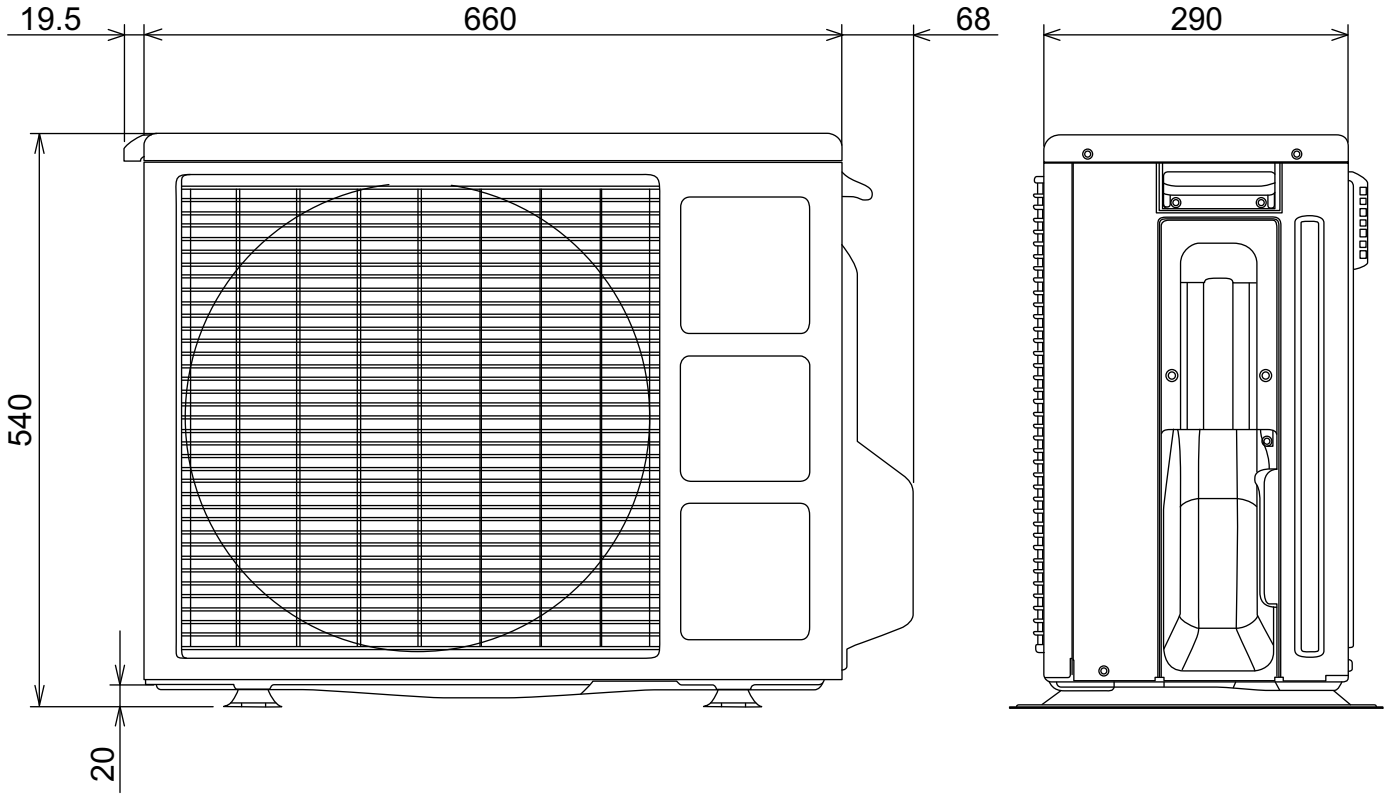

# REFRIGERANT SYSTEM DIAGRAM

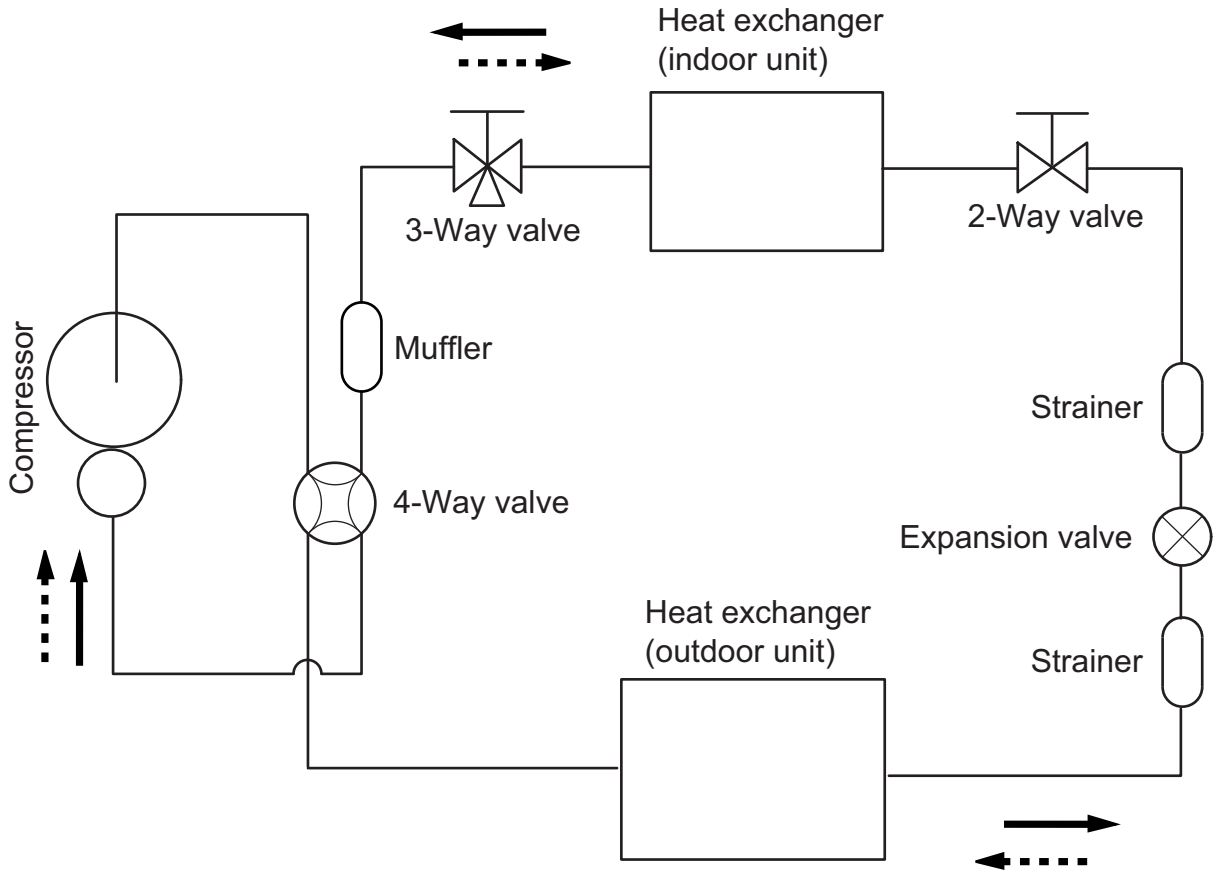


Refrigerant direction

Cooling

Heating

Refrigerant pipe diameter
Liquid : 1/4" (6.35 mm)
Gas : 3/8" (9.52 mm)

# CIRCUIT DIAGRAM

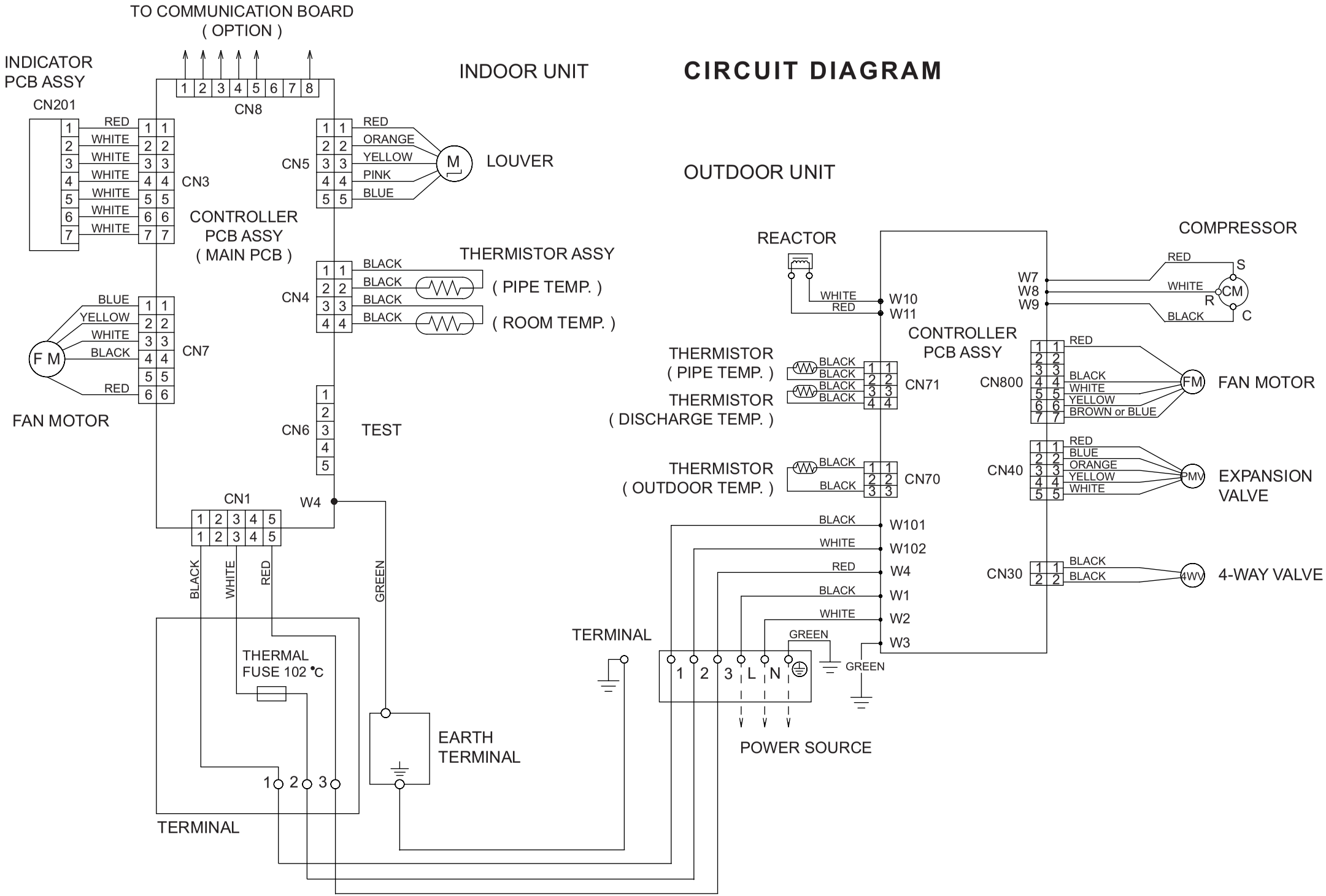

# INDOOR PCB
# CIRCUIT DIAGRAM

CONTROL UNIT
ASYG07LECA : EZ-0101SHSE
ASYG09LECA : EZ-0101THSE

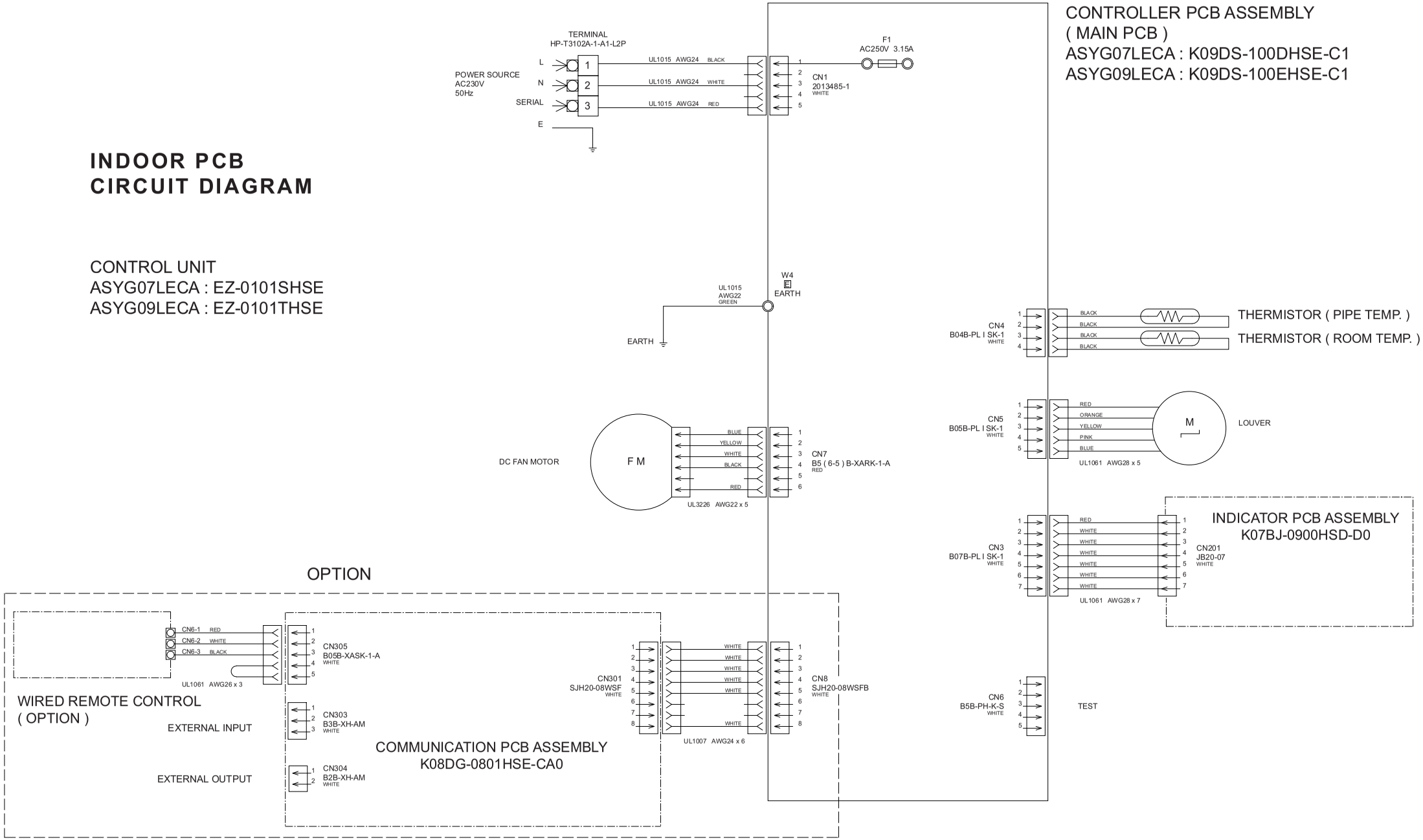

INDOOR UNIT
CONTROLLER PCB ASSEMBLY ( MAIN PCB )
ASYG07LECA : K09DS-100DHSE-C1
ASYG09LECA : K09DS-100EHSE-C1

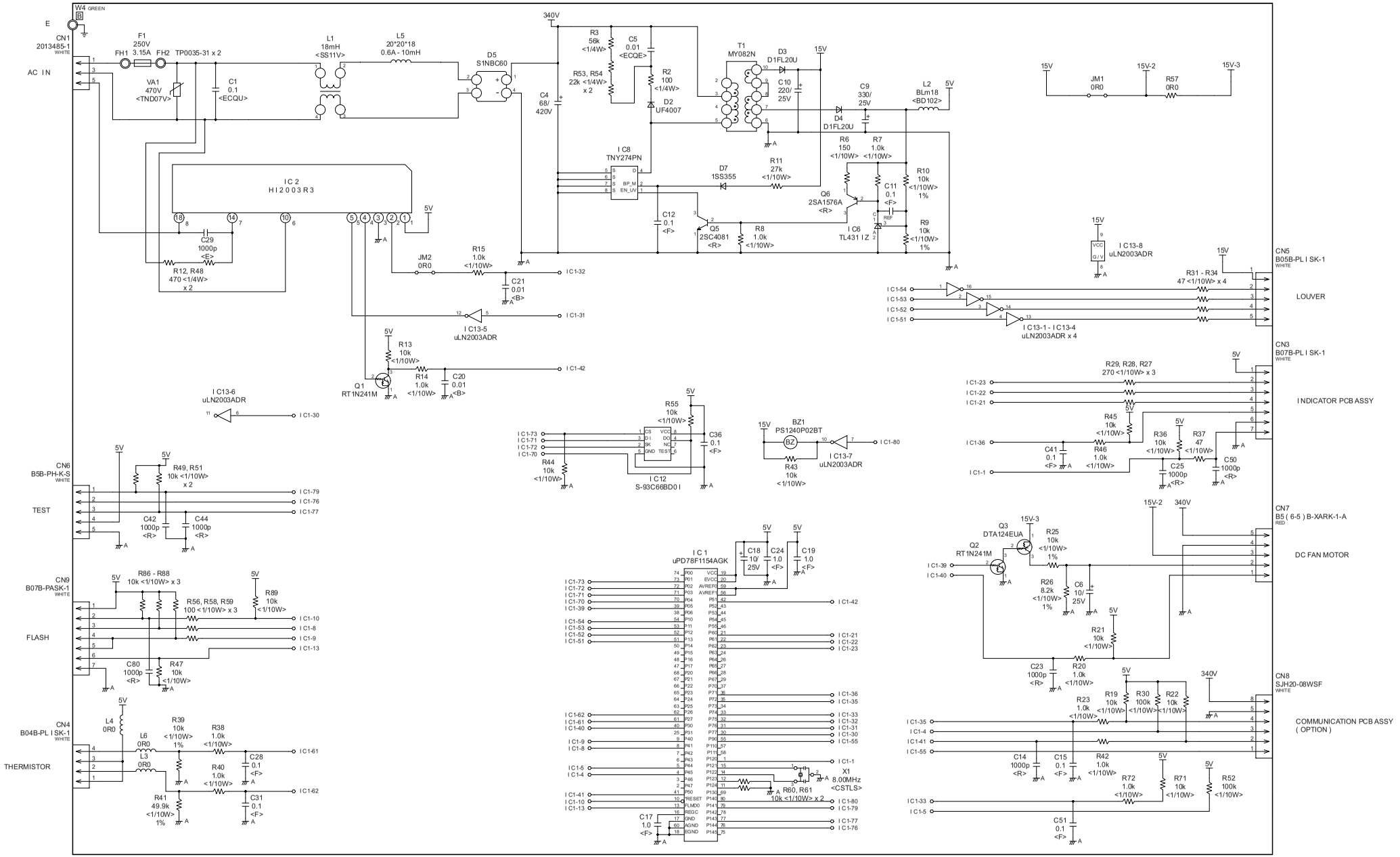

INDOOR UNIT
INDICATOR PCB ASSEMBLY
K07BJ-0900HSD-D0

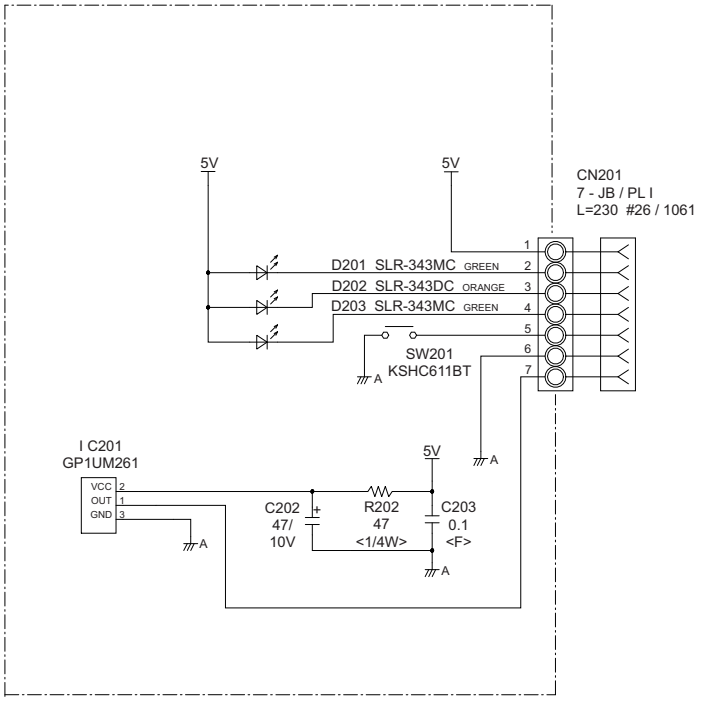

TO CONTROLLER
PCB ASSENBLY

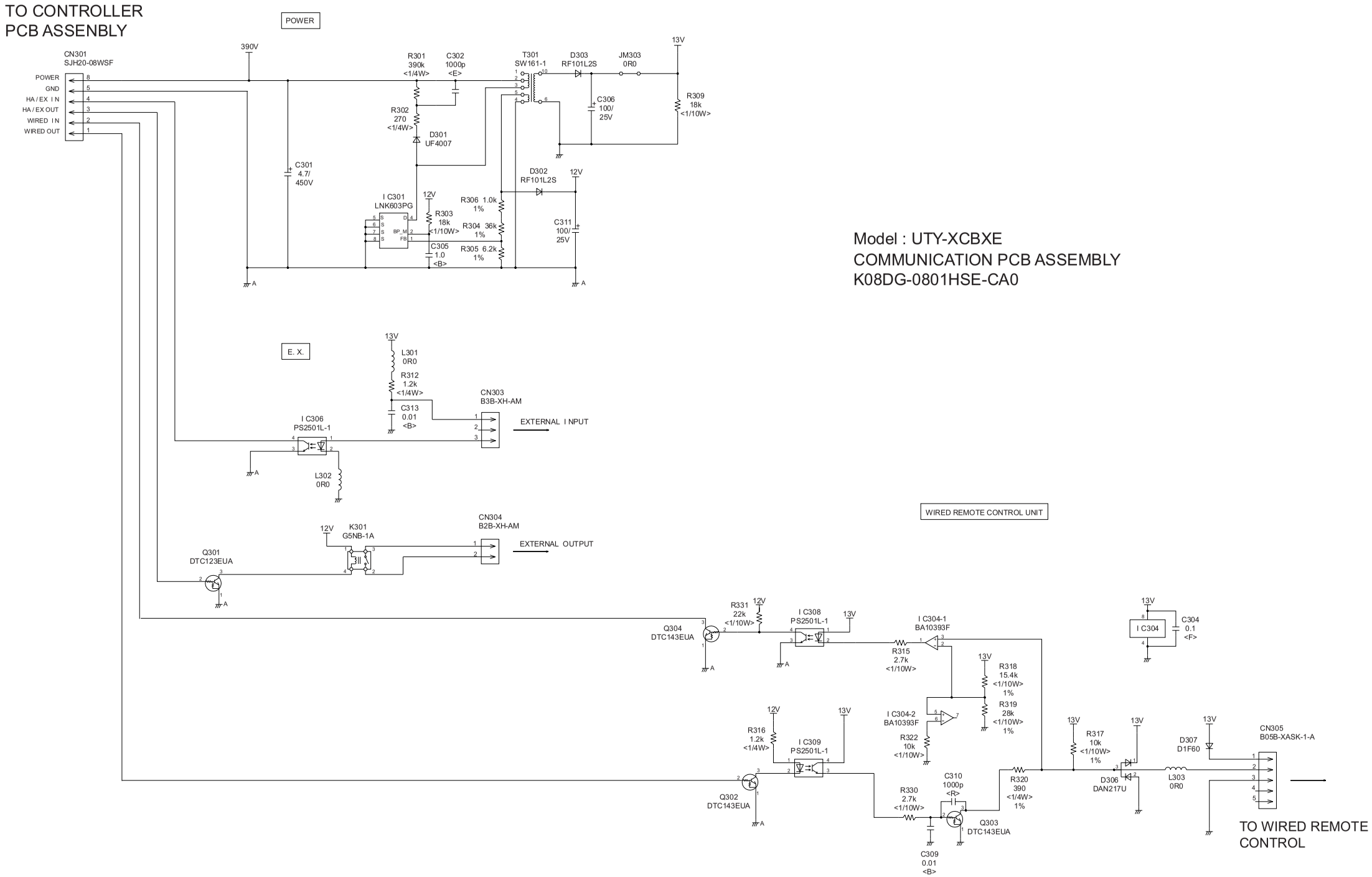


Model : UTY-XCBXE
COMMUNICATION PCB ASSEMBLY
K08DG-0801HSE-CA0

TO WIRED REMOTE
CONTROL

# OUTDOOR PCB CIRCUIT DIAGRAM

INVERTER ASSEMBLY
AOYG07LEC : EZ-0100HHUE
AOYG09LEC : EZ-0100KHUE

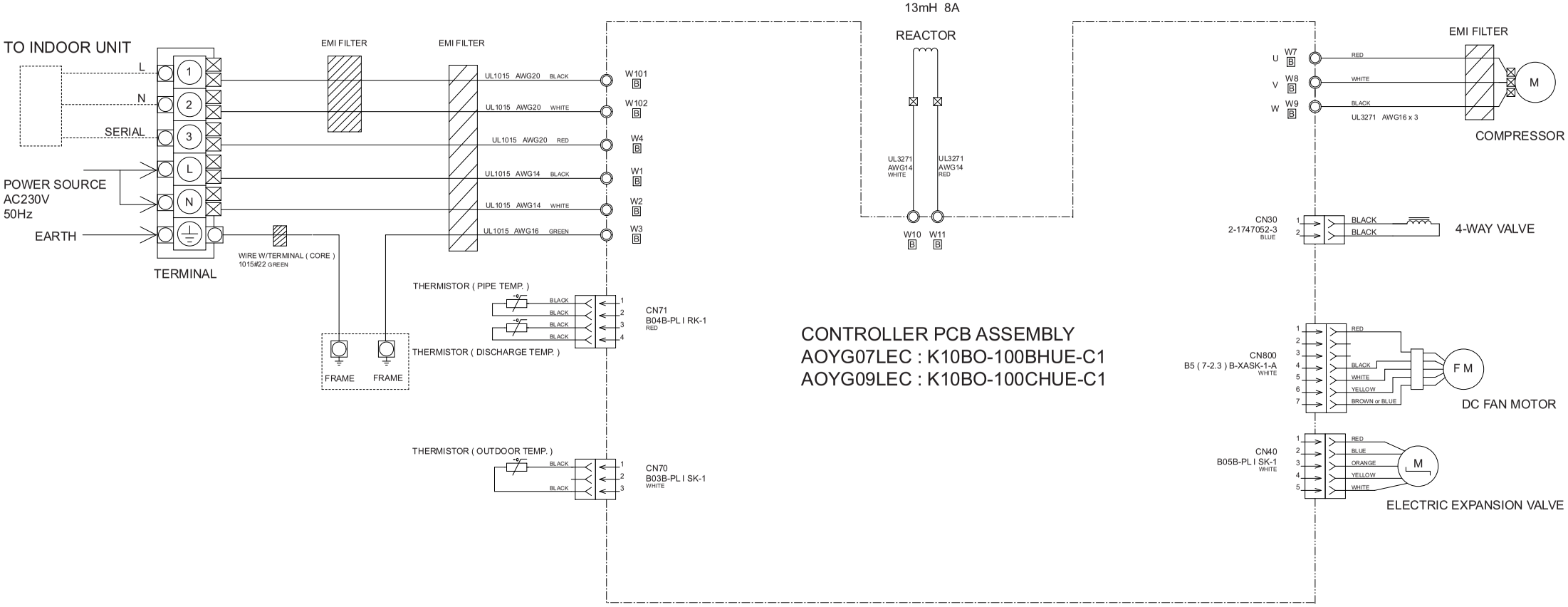

OUTDOOR UNIT
CONTROLLER PCB ASSEMBLY
AOYG07LEC : K10BO-100BHUE-C1
AOYG09LEC : K10BO-100CHUE-C1

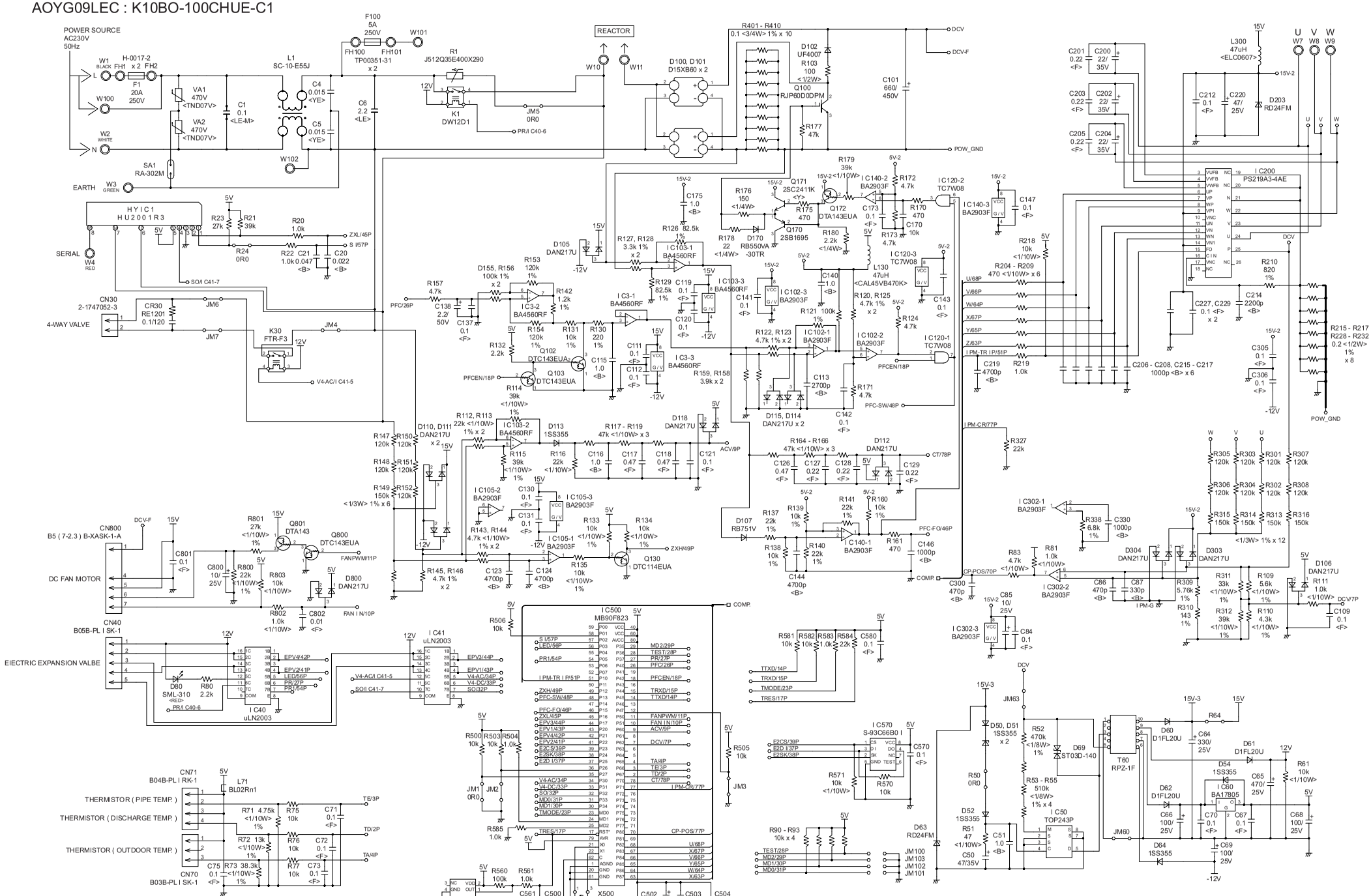

# ERROR DETECTION

## INDOOR UNIT
## REMOTE CONTROL

If you use a wireless remote control, the lamp on the photo detector unit will output error codes by way of blinking patterns.
If you use a wired remote control, error codes will appear on the remote control display.
See the lamp blinking patterns and error codes in the table.
An error display is displayed only during operation.

Indoor unit display

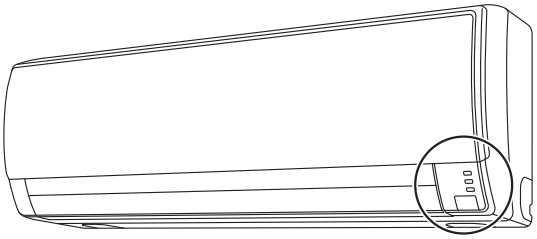

**OPERATION** — OPERATION lamp (green)
**TIMER** — TIMER lamp (orange)
**ECONOMY** — ECONOMY lamp (green)

Wired remote control display (Option)

If an error occurs, the following display will be shown.
(“Er” will appear in the set room temperature display.)

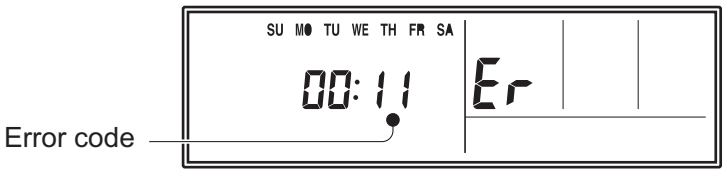


● : 0.5s ON / 0.5s OFF

◇ : 0.1s ON / 0.1s OFF

( ) : Number of flashing

| Indoor unit | | | Wired remote control | Description |
|---|---|---|---|---|
| OPERATION lamp (green) | TIMER lamp (orange) | ECONOMY lamp (green) | | |
| ● (1) | ● (1) | ◇ | 11 | Serial communication error |
| ● (1) | ● (2) | ◇ | 12 | Wired remote control communication error |
| ● (1) | ● (5) | ◇ | 15 | Check run unfinished |
| ● (2) | ● (2) | ◇ | 22 | Indoor unit capacity error |
| ● (2) | ● (3) | ◇ | 23 | Combination error |
| ● (3) | ● (2) | ◇ | 32 | Indoor unit PCB model information error |
| ● (3) | ● (5) | ◇ | 35 | Manual auto switch error |
| ● (4) | ● (1) | ◇ | 41 | Room temp. sensor error |
| ● (4) | ● (2) | ◇ | 42 | Indoor unit Heat Ex. Middle temp. sensor error |
| ● (5) | ● (1) | ◇ | 51 | Indoor unit fan motor error |
| ● (5) | ● (3) | ◇ | 53 | Drain pump error |
| ● (5) | ● (7) | ◇ | 57 | Damper error |
| ● (5) | ● (15) | ◇ | 5U | Indoor unit error |
| ● (6) | ● (2) | ◇ | 62 | Outdoor unit main PCB model information error or communication error |
| ● (6) | ● (3) | ◇ | 63 | Inverter error |
| ● (6) | ● (4) | ◇ | 64 | Active filter error, PFC circuit error |
| ● (6) | ● (5) | ◇ | 65 | Trip terminal L error |
| ● (6) | ● (10) | ◇ | 6A | Display PCB microcomputers communication error |
| ● (7) | ● (1) | ◇ | 71 | Discharge temp. sensor error |

| Indoor unit | | | Wired remote control | Description |
|---|---|---|---|---|
| OPERATION lamp (green) | TIMER lamp (orange) | ECONOMY lamp (green) | | |
| ● (7) | ● (2) | ◇ | 72 | Compressor temp. sensor error |
| ● (7) | ● (3) | ◇ | 73 | Outdoor unit Heat Ex. liquid temp. sensor error |
| ● (7) | ● (4) | ◇ | 74 | Outdoor temp. sensor error |
| ● (7) | ● (5) | ◇ | 75 | Suction Gas temp. sensor error |
| ● (7) | ● (6) | ◇ | 76 | • 2-way valve temp. sensor error<br>• 3-way valve temp. sensor error |
| ● (7) | ● (7) | ◇ | 77 | Heat sink temp. sensor error |
| ● (8) | ● (2) | ◇ | 82 | • Sub-cool Heat Ex. gas inlet temp. sensor error<br>• Sub-cool Heat Ex. gas outlet temp. sensor error |
| ● (8) | ● (3) | ◇ | 83 | Liquid pipe temp. sensor error |
| ● (8) | ● (4) | ◇ | 84 | Current sensor error |
| ● (8) | ● (6) | ◇ | 86 | • Discharge pressure sensor error<br>• Suction pressure sensor error<br>• High pressure switch error |
| ● (9) | ● (4) | ◇ | 94 | Trip detection |
| ● (9) | ● (5) | ◇ | 95 | Compressor rotor position detection error (permanent stop) |
| ● (9) | ● (7) | ◇ | 97 | Outdoor unit fan motor error |
| ● (9) | ● (9) | ◇ | 99 | 4-way valve error |
| ● (10) | ● (1) | ◇ | A1 | Discharge temp. error |
| ● (10) | ● (3) | ◇ | A3 | Compressor temp. error |
| ● (10) | ● (4) | ◇ | A4 | High pressure error |
| ● (10) | ● (5) | ◇ | A5 | Low pressure error |

OUTDOOR UNIT

| LED | ERROR |
|---|---|
| on | Discharge temperature abnormal |
| 0.5 second on / 0.5 second off | IPM overcurrent protection |
| 0.1 second on / 0.1 second off | Thermistor abnormal |
| 2.0 second on / 2.0 second off | CT abnormal |
| 0.1 second on / 2.0 second off | Compressor location abnormal |
| 5.0 second on / 5.0 second off | Fan abnormal |

# PARTS

INDOOR UNIT
Front panel

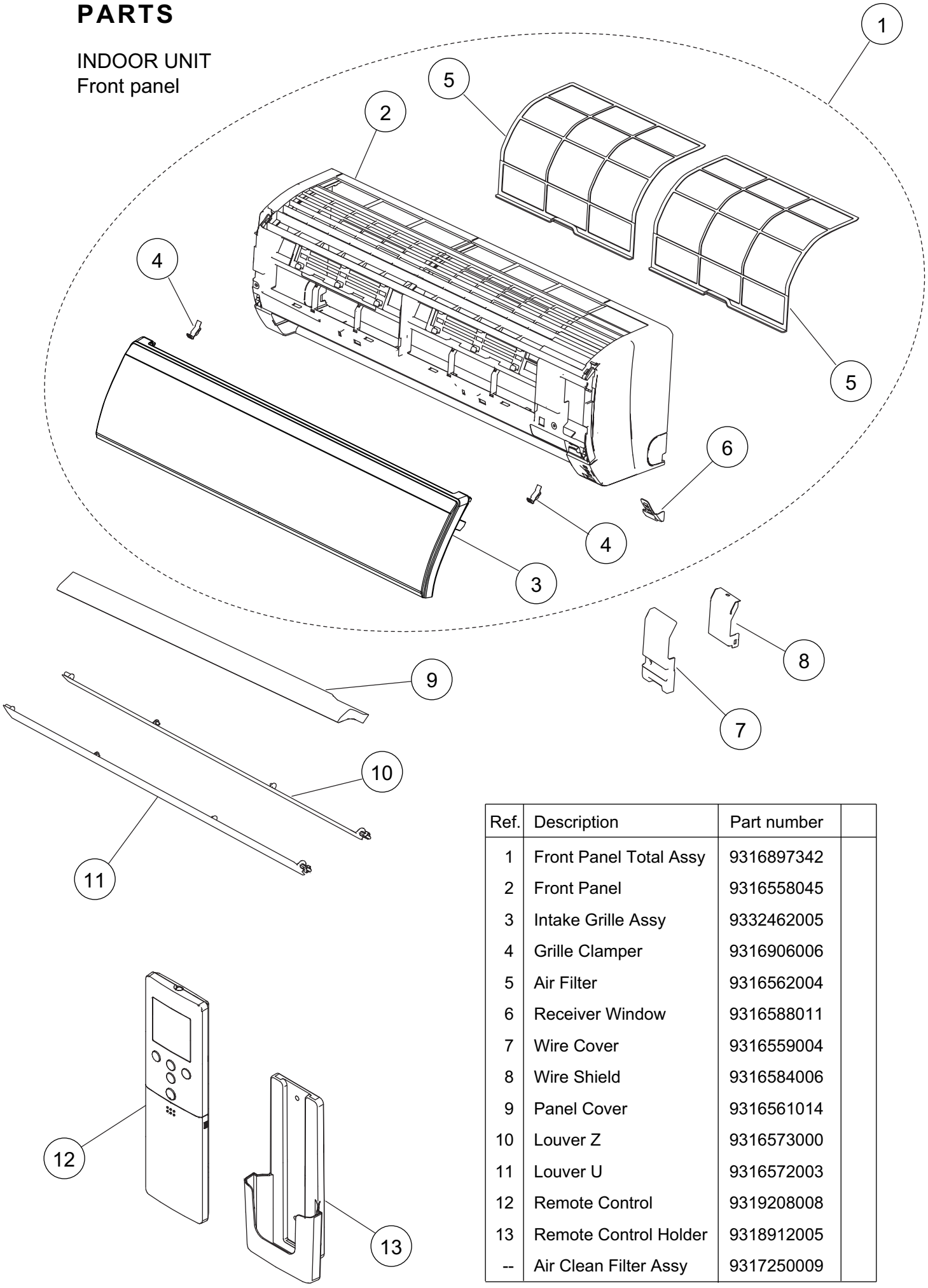


| Ref. | Description | Part number | |
|---|---|---|---|
| 1 | Front Panel Total Assy | 9316897342 | |
| 2 | Front Panel | 9316558045 | |
| 3 | Intake Grille Assy | 9332462005 | |
| 4 | Grille Clamper | 9316906006 | |
| 5 | Air Filter | 9316562004 | |
| 6 | Receiver Window | 9316588011 | |
| 7 | Wire Cover | 9316559004 | |
| 8 | Wire Shield | 9316584006 | |
| 9 | Panel Cover | 9316561014 | |
| 10 | Louver Z | 9316573000 | |
| 11 | Louver U | 9316572003 | |
| 12 | Remote Control | 9319208008 | |
| 13 | Remote Control Holder | 9318912005 | |
| -- | Air Clean Filter Assy | 9317250009 | |

INDOOR UNIT
Casing assy

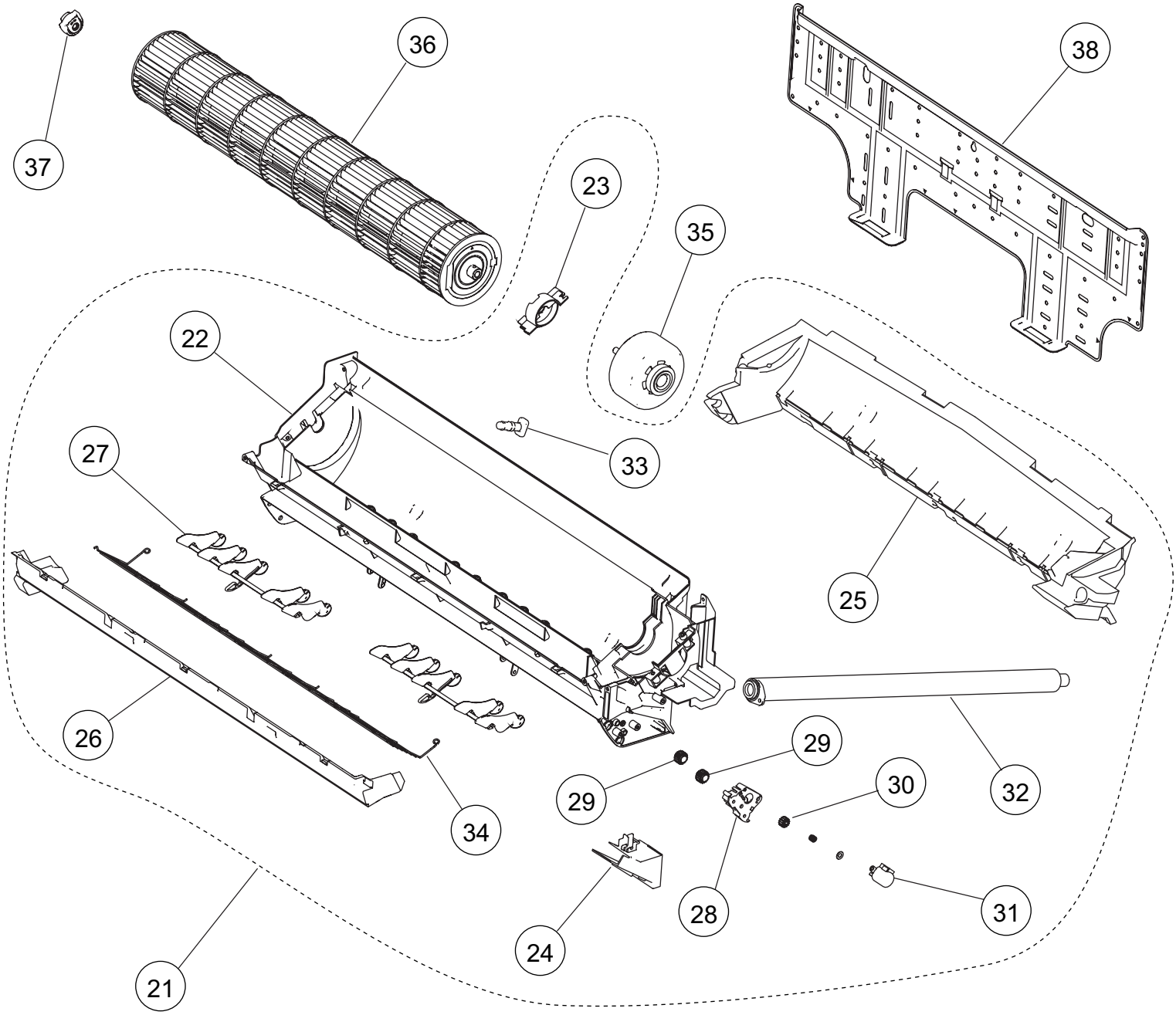


| Ref. | Description | Part number | |
|---|---|---|---|
| 21 | Casing Assy | 9316892095 | |
| 22 | Casing | 9316563001 | |
| 23 | Motor Cover | 9316568006 | |
| 24 | Cable Guide | 9316567009 | |
| 25 | Casing Cover B | 9316569003 | |
| 26 | Casing Cover F | 9316570009 | |
| 27 | R and L Louver B | 9316961005 | |
| 28 | Louver Gear Holder | 9316575004 | |
| 29 | Louver Gear | 9316574007 | |

| Ref. | Description | Part number | |
|---|---|---|---|
| 30 | Gear A | 9309994003 | |
| 31 | Motor Step | 9900139193 | |
| 32 | Drain Hose Assy | 9316904002 | |
| 33 | Drain Cap | 9316177017 | |
| 34 | Fan Guard | 9317182003 | |
| 35 | Fan Motor | 9603100001 | |
| 36 | Crossflow Fan Assy | 9316830004 | |
| 37 | Shaft Holder C | 9306628017 | |
| 38 | Bracket Panel | 9316590007 | |

INDOOR UNIT
Control box

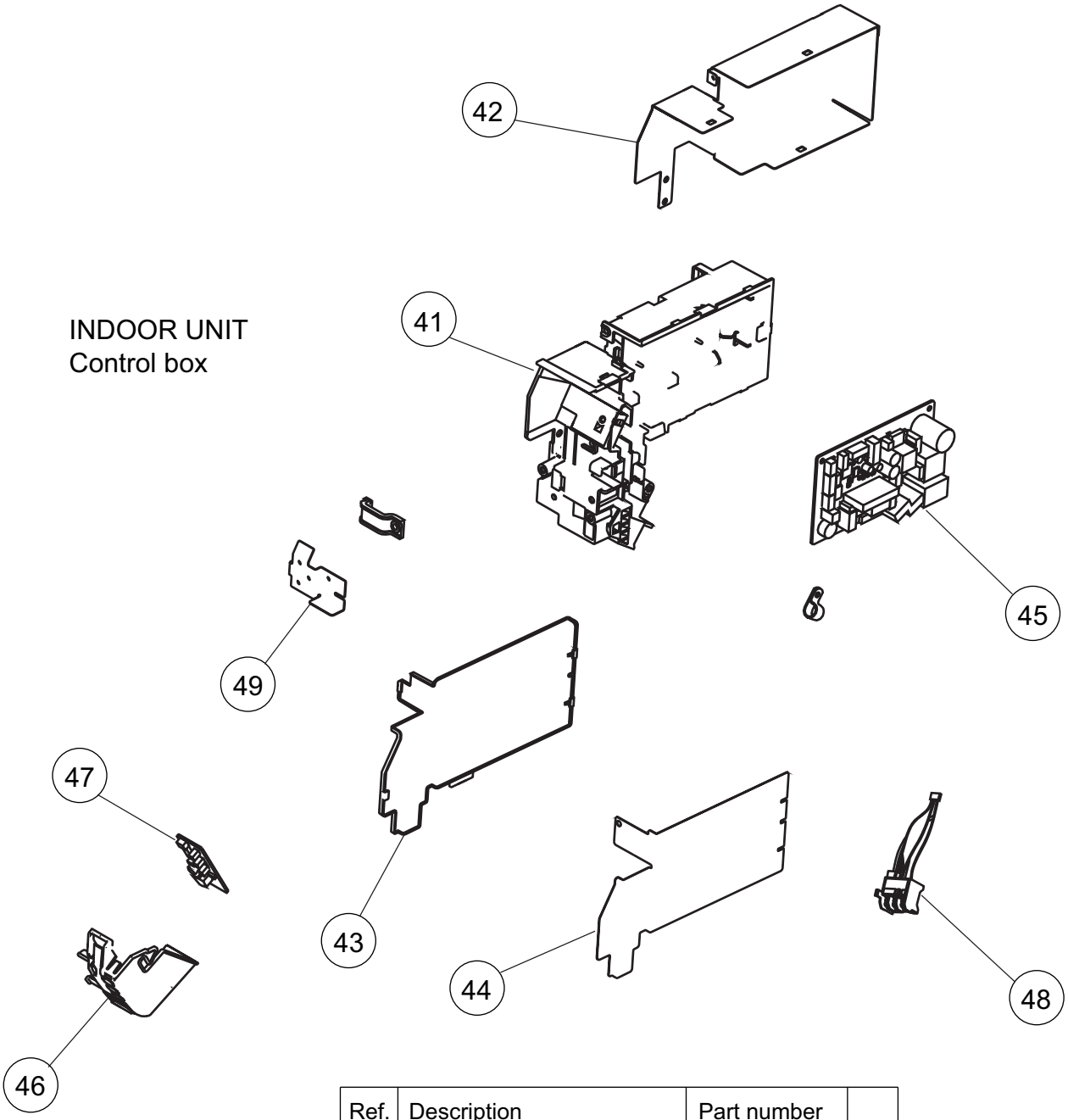


| Ref. | Description | Part number | |
|---|---|---|---|
| 41 | Control Box | 9316582002 | |
| 42 | Box Shield | 9316580008 | |
| 43 | Control Cover | 9316583009 | |
| 44 | Cover Shield | 9316581005 | |
| 45 | Controller PCB Assy (07) | 9708536156 | |
| 45 | Controller PCB Assy (09) | 9708536163 | |
| 46 | Display Case | 9316587007 | |
| 47 | Display PCB Assy | 9707649024 | |
| 48 | Terminal | 9900638009 | |
| 49 | Earth Terminal | 9316586000 | |
| -- | Thermistor Assy | 9900563004 | |

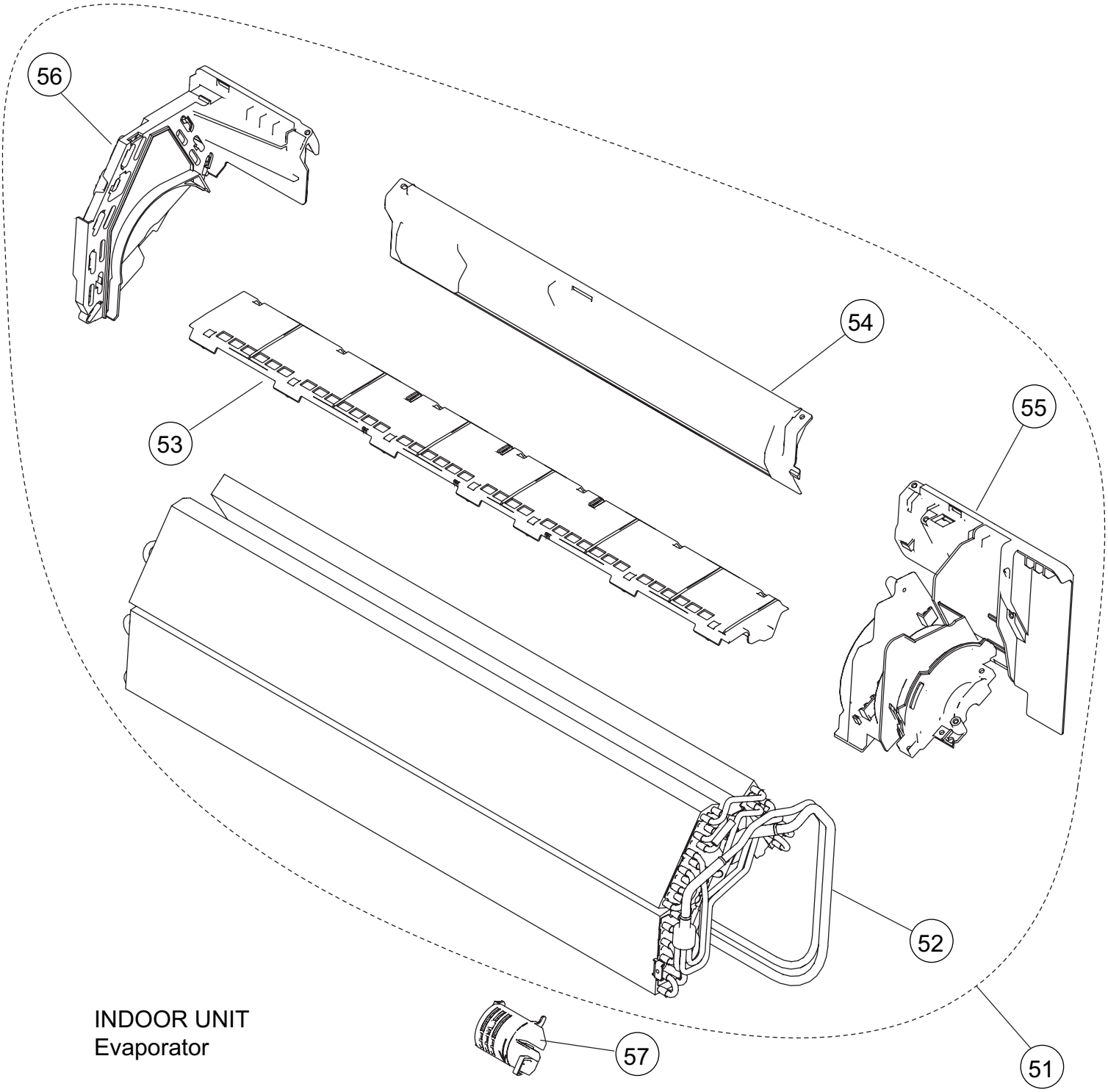


INDOOR UNIT
Evaporator

| Ref. | Description | Part number | |
|---|---|---|---|
| 51 | Evaporator Total Assy | 9316893009 | |
| 52 | Joint Pipe Assy | 9316923010 | |
| 53 | Filter Guide | 9316578005 | |
| 54 | Rear Bracket | 9316566019 | |
| 55 | Evaporator Holder R | 9316565005 | |
| 56 | Evaporator Holder L | 9316564008 | |
| 57 | Room Thermistor Holder | 9316895003 | |

# PARTS

OUTDOOR UNIT

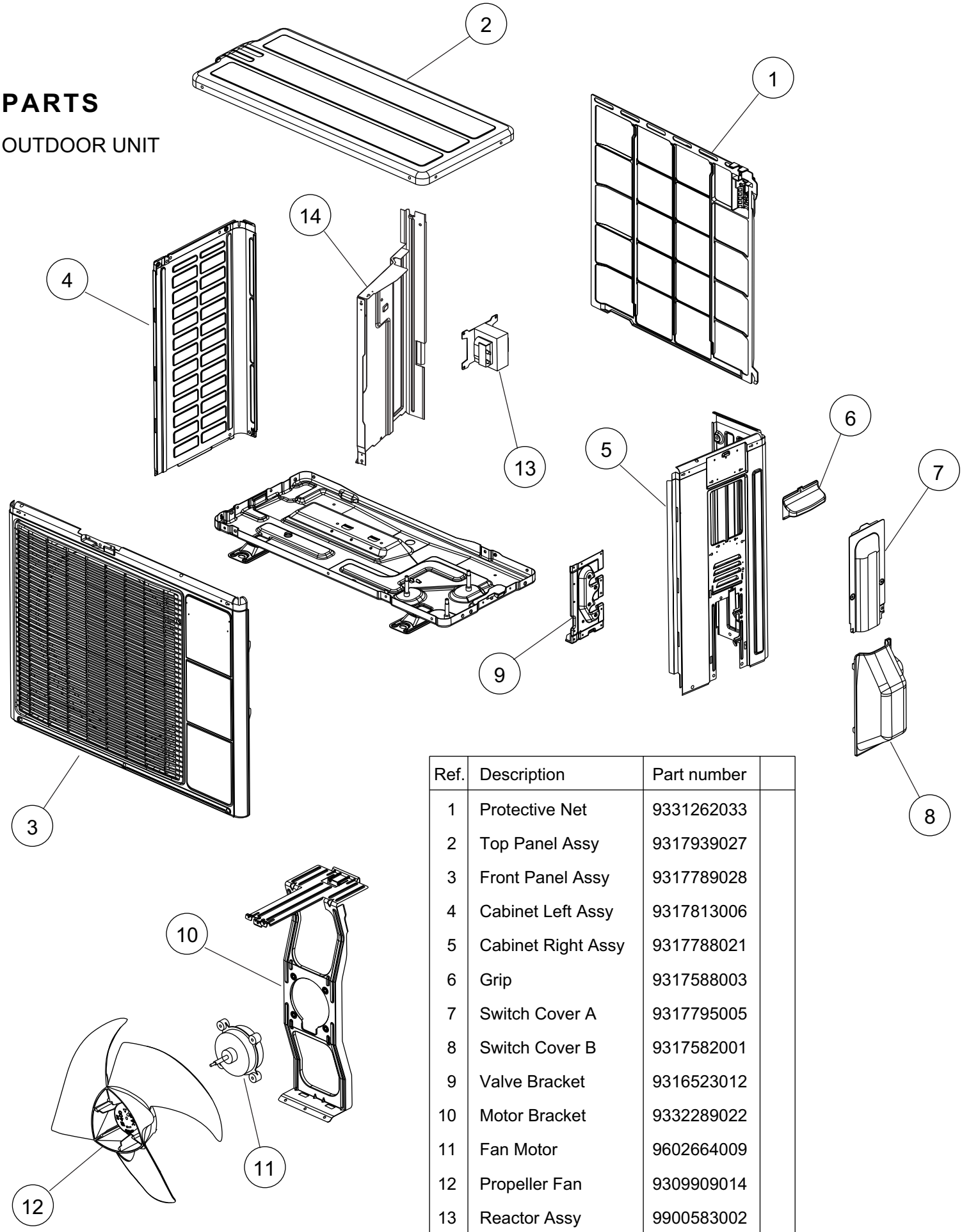


| Ref. | Description | Part number | |
|---|---|---|---|
| 1 | Protective Net | 9331262033 | |
| 2 | Top Panel Assy | 9317939027 | |
| 3 | Front Panel Assy | 9317789028 | |
| 4 | Cabinet Left Assy | 9317813006 | |
| 5 | Cabinet Right Assy | 9317788021 | |
| 6 | Grip | 9317588003 | |
| 7 | Switch Cover A | 9317795005 | |
| 8 | Switch Cover B | 9317582001 | |
| 9 | Valve Bracket | 9316523012 | |
| 10 | Motor Bracket | 9332289022 | |
| 11 | Fan Motor | 9602664009 | |
| 12 | Propeller Fan | 9309909014 | |
| 13 | Reactor Assy | 9900583002 | |
| 14 | Separator Assy | 9317786010 | |
| -- | Emblem | 9319151007 | |
| -- | Drain Assy | 9303029022 | |

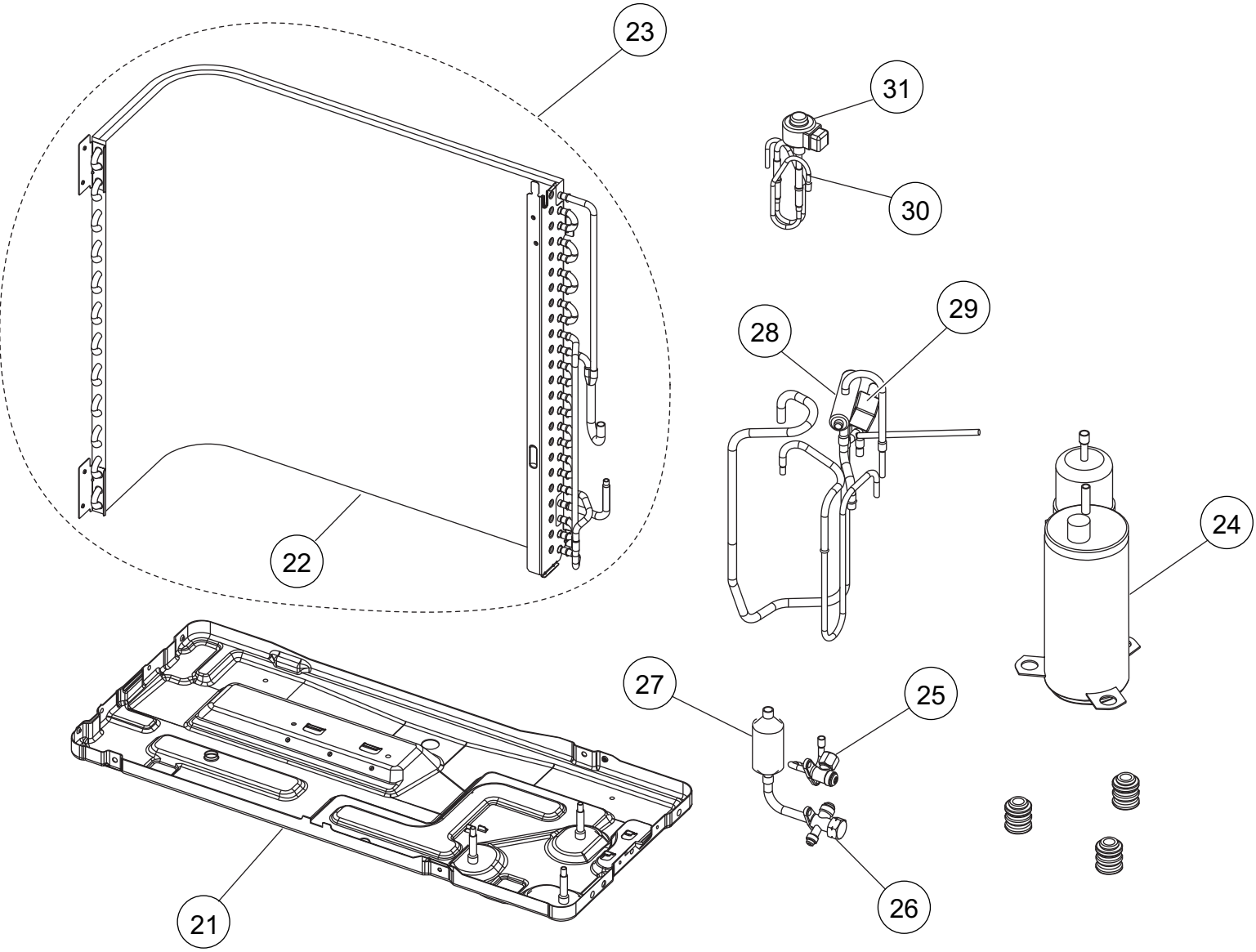


OUTDOOR UNIT

| Ref. | Description | Part number | |
|---|---|---|---|
| 21 | Base Assy | 9316916029 | |
| 22 | Condenser Assy | 9317286008 | |
| 23 | Condenser Total Assy | 9317287012 | |
| 24 | Compressor Assy | 9317083010 | |
| 25 | 2 way Valve Assy | 9318252002 | |
| 26 | 3 way Valve Assy | 9318254006 | |
| 27 | Muffler | 9317394000 | |
| 28 | 4 way Valve Assy | 9317890021 | |
| 29 | Solenoid | 9970079023 | |
| 30 | Pulse Motor Valve Assy | 9317216036 | |
| 31 | Expansion Valve Coil | 9970103025 | |

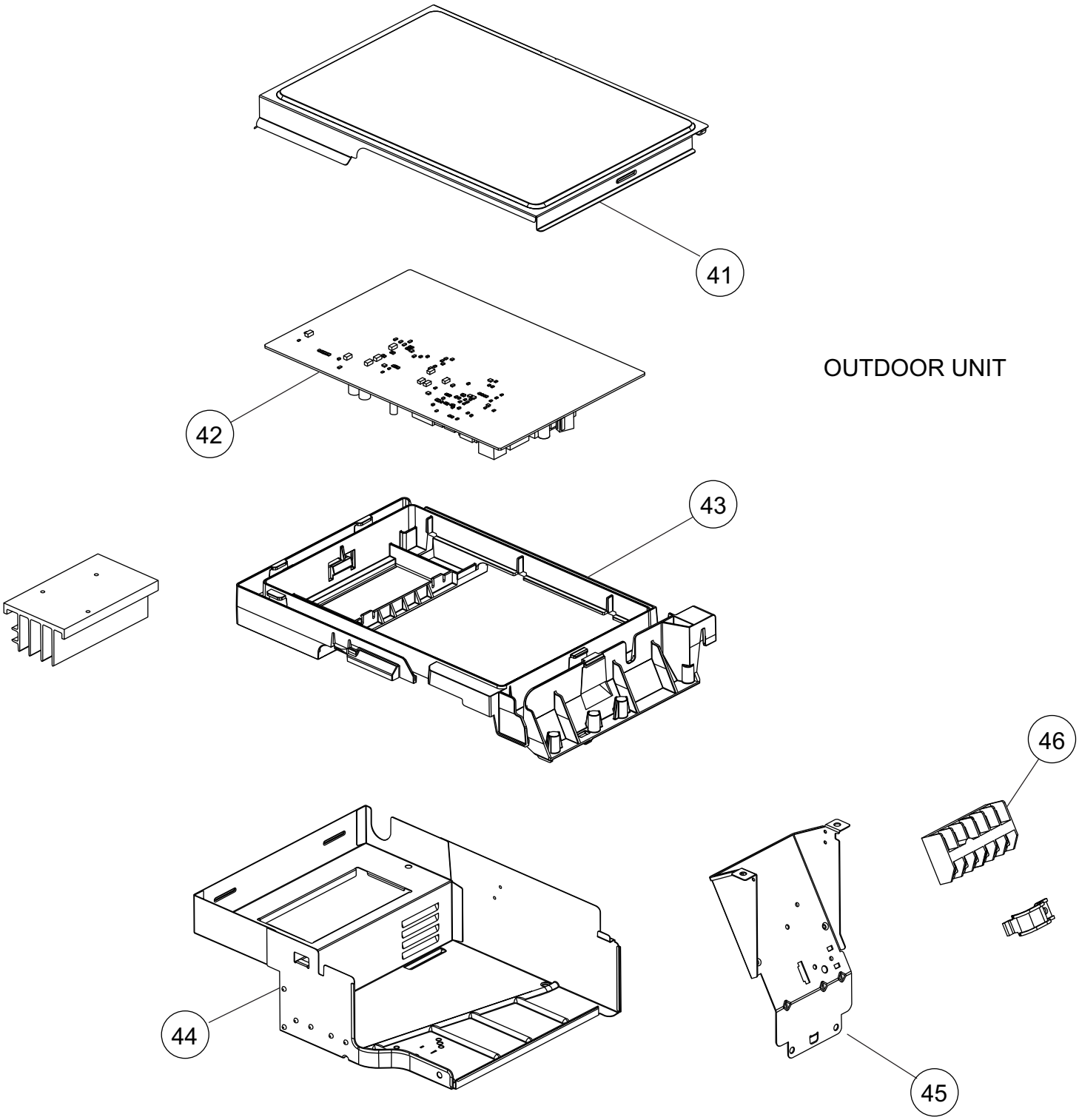


OUTDOOR UNIT

| Ref. | Description | Part number | |
|---|---|---|---|
| 41 | Sealed Panel | 9318181012 | |
| 42 | Controller PCB Assy (07) | 9708683096 | |
| 42 | Controller PCB Assy (09) | 9708683102 | |
| 43 | PCB Holder | 9318182002 | |
| 44 | Inverter Case Assy | 9332247008 | |
| 45 | Terminal Bracket | 9317816038 | |
| 46 | Terminal | 9900435028 | |
| -- | Outdoor Thermistor | 9900565008 | |
| -- | Thermistor Assy | 9900628000 | |

# ACCESSORIES

INDOOR UNIT

| Name and Shape | Part number |
|---|---|
| Wall hook bracket | 9316590007 |
| Remote control | 9319208008 |
| Remote control holder | 9318912005 |
| Battery (penlight) | 0600185541 |
| Cloth tape | 9310519004 |
| Tapping screw (big)<br>($\phi$ 4 x 25) | 0700076046 |
| Tapping screw (small)<br>($\phi$ 3 x 12) | 0700019036 |

OPTION

| Name and Shape | Part number |
|---|---|
| Air cleaning filter<br>(Apple katekin) | 9315361035 |
| Air cleaning filter<br>(Ion deodorant) | 9315361042 |

1101G3871