FUJITSU

U0672819_2123_EN_1
12/11/2020

R32

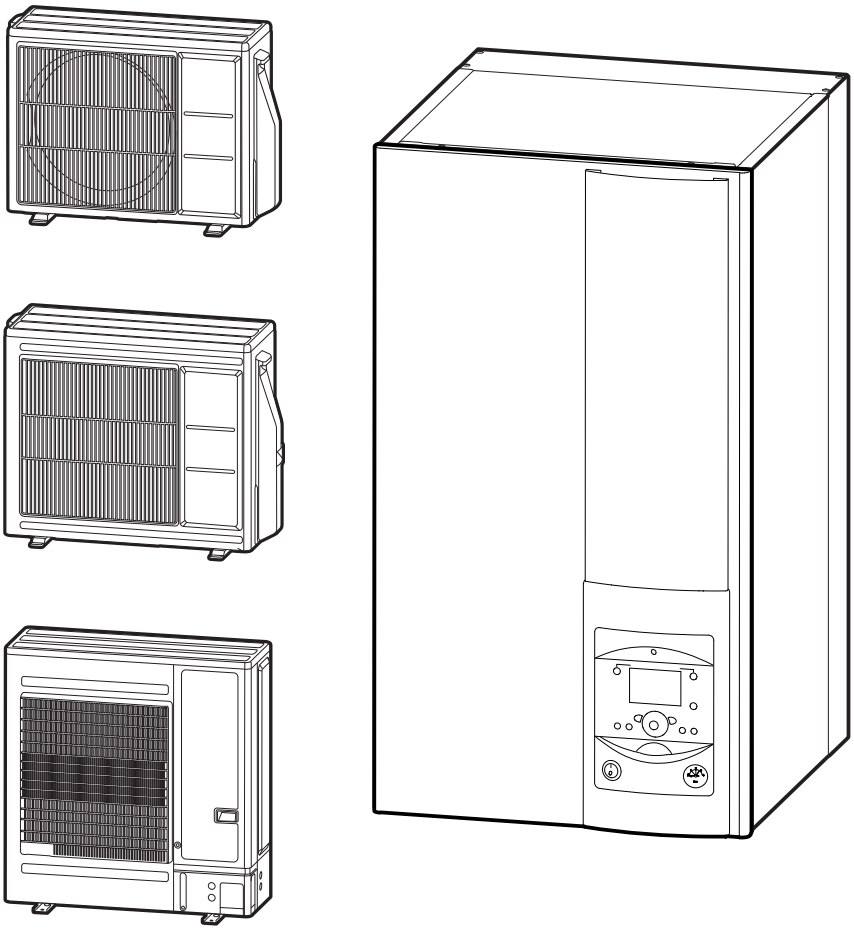

Outdoor unit

- WOYA060KLT ☐
- WOYA080KLT ☐
- WOYA100KLT ☐

Hydraulic unit

- WSYA050ML3 ☐
- WSYA080ML3 ☐
- WSYA100ML3 ☐

EN

INSTALLATION

WATERSTAGE

Air/water heat pump split 1 service

For professionals. To be kept by the user for future reference.

■ Installation and maintenance rules

The appliance must be installed and maintained by an approved professional in accordance with current regulations and codes of practice.

- **Do not use any means to accelerate the defrosting process or to clean the appliance, other than those recommended by the manufacturer.**
- **The appliance must be stored in a room that does not contain continuously operating ignition sources (for example: open flames, gas appliance or operating electric heater).**
- **Do not pierce or burn.**
- **Be careful, refrigerants can be odorless.**

■ Handling

The outdoor unit must not be placed in a horizontal position during transport.

If not kept upright during transport, the appliance could be damaged through displacement of the refrigerant and damage to the compressor suspensions.

Any damage caused by transportation in a horizontal position is not covered by the warranty.

If necessary, the outdoor unit may be tilted only during manual handling (to go through a door or to take a stair). This operation must be conducted very carefully and the appliance must be immediately restored to the upright position.

■ Installation

The heat pump installation must meet the requirements related to the location of the heat pump.

The heat pump is designed to be installed at less than 2000 m altitude.

In accordance with IEC 60-335-2-40 standard, the hydraulic module of the heat pump as well as all the refrigerant connections that cross the inhabited area must be installed in rooms respecting the minimum surface.

- **Warning, hydraulic unit should not be installed in an air current.**

■ Refrigerant

The maximum load of R32 fluid with supplements must not exceed 1.84 kg.

■ Containment of refrigeration circuits

All refrigeration circuits are sensitive to dust and moisture contamination. If any such pollutants penetrate the refrigeration circuit, they can affect the reliability of the heat pump.

- **Make sure that the connections and refrigeration circuits (hydraulic unit, outdoor unit) are protected correctly.**
- **In the event of a subsequent failure and following an inspection, the presence of moisture or foreign bodies in the compressor oil would automatically void the warranty.**

- Check upon receipt that the fittings and refrigeration circuit caps mounted on hydraulic unit and outdoor unit are properly seated and secured (cannot be loosened with bare hands). If this is not the case, tighten them using a C spanner.
- Check also that the refrigeration connections are sealed (plastic caps or tubes crimped at the ends and brazed). If the caps must be removed during the installation (tubes to be re-cut for example), put them back as soon as possible.

■ Hydraulic connections

The connection must comply with industry standard practice according to current regulations.

Reminder : Seal everything when fitting in accordance with industry standard practice for plumbing work:

- Use suitable seals (fibre gasket, O-ring).
- Use Teflon or hemp tape.
- Use sealing paste (synthetic depending on the case).

Use glycol/water mix if the minimum flow temperature is set below 10°C. If you are using a glycol/water mix, arrange for an annual check on the quality of the glycol. Use monopropylene glycol only. The recommended concentration is 30% minimum. **Never use monoethylene glycol.**

- **In some installations, the presence of different metals can cause corrosion problems; the formation of metal particles and sludge can appear in the hydraulic circuit.**
- **In this case, it is advisable to use a corrosion inhibitor in the proportions indicated by the manufacturer.**
- **You must also ensure that treated water does not become corrosive.**

On the cold water inlet, place a safety valve calibrated to between 7 and 10 bar max. (depending on local regulations) and connected to a drain pipe leading to the sewer. Operate the safety valve according to manufacturer's specifications. The domestic hot water tank must be fed with cold water passing through a safety valve. There must be no other valves between the safety valve and the tank.

■ Electrical connections

Before performing any maintenance, make sure that all power supplies have been cut off.

• Specifications of electricity supply

The electrical installation must be carried out in accordance with current regulations.

Electrical connections will only be made once all other installation operations (fastening, assembly, etc.) have been completed.

Warning!

The contract signed with the energy provider must be sufficient not only to cover the heat pump's power requirements but also the combined sum of all the appliances likely to be operating at the same time. If the power is too low, check the power rating stated in your contract with your energy provider.

Never use a power socket for the power supply.

The heat pump must be supplied directly with power (without external switch) by special protected leads from the electric panel via dedicated bipolar circuit breakers, C curve for the outdoor unit, C curve for the electrical heating* and domestic water backups*.

The electrical installation must be fitted with a 30mA RCD.

This appliance is designed to operate using a nominal voltage of 230 V +/- 10%, 50 Hz.

Type 60245 IEC 57 or 60245 IEC 88 outside power supply cables must be used.

• General remarks on electrical connections

It is essential to maintain neutral-phase polarity when making electrical connections.

Rigid wires are preferable for fixed installations, particularly in a building.

Tighten the cables using the cable glands to prevent the power cables from being accidentally disconnected.

The earth connection and its continuity must be ensured.

The earth wire must be longer than the other wires.

• Cable glands

To ensure the stability of power (Low Voltage) and sensor (Extra-Low Voltage) cables, it is essential that the cable glands are tightened according to the following recommendations:

Size of cable gland (mm)	Diameter of cable (mm)	Cable gland tightening torque (check-nut) (N.m)	Coupling net tightening torque (N.m)
PG7	1 to 5	1.3	1
PG9	1.5 to 6	3.3	2.6
PG16	5 to 12	4.3	2.6

• Connecting to screw terminals

The use of ring, spade or blade terminals or caps is prohibited.

- Always select wire that complies with current standards.
- Strip wire end around 25 mm.
- With round end pliers, form a loop with a diameter which matches the tightening screws on the terminal.
- Tighten the terminal screw firmly onto the loop created. Insufficient tightening can cause overheating, leading to breakdown or even fire.

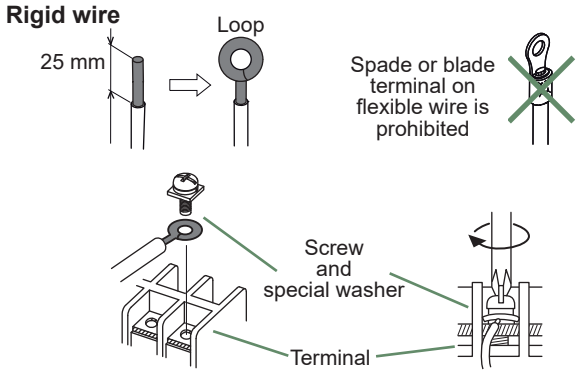

• Connecting to controller boards

- Remove the corresponding connector and make the connection.

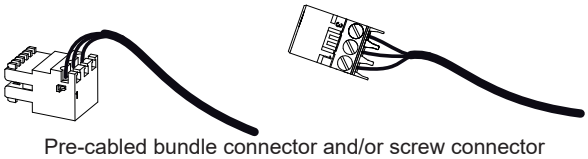

Pre-cabled bundle connector and/or screw connector

• Connecting to spring terminals

- Strip wire end around 12 mm.
- Push the spring with a screwdriver so that the wire enters the cage.
- Slide the wire into the opening provided for this purpose.
- Remove the screwdriver and then check that the wire stays gripped by the cage by pulling on it.

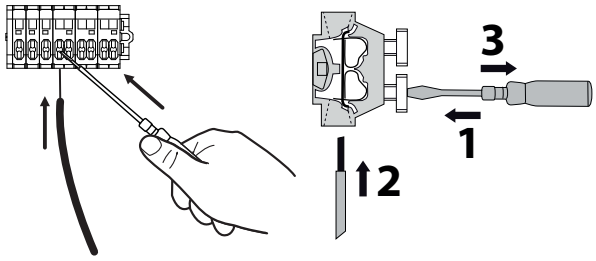

(* according option)

This appliance must be installed by qualified personnel holding a certificate of competence in the handling of refrigerants.

Contents

This document was written in French and translated.

Read the document comprising the precautions for use (regulation installation and maintenance conditions) before installation and/or use.

Symbols and definitions

Warning. Risk of serious injury to the person and / or risk of damage to the machine. Observe the warning.	Warning : Electricity hazard
Important information that must always be kept in mind.	Warning : Slightly flammable refrigerant.
Tips and tricks / Advice	Read the installation manual
Bad practice	Read the Operating Manual
	Read the instructions

Description of the equipment

Packing contents list

Heat Pump	*Outdoor unit*	*Hydraulic unit*
Model	***Reference***	***Reference***
Waterstage Split Comfort Series 5	WOYA060KLT	WSYA050ML3
Waterstage Split Comfort Series 6	WOYA060KLT	WSYA080ML3
Waterstage Split Comfort Series 8	WOYA080KLT	
Waterstage Split Comfort Series 10	WOYA100KLT	WSYA100ML3

Packing

- **1 package:** Outdoor unit.
- **1 package:** Hydraulic unit and outside temperature sensor.

Accessories	
	Outdoor temperature sensor
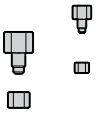	Adapter 1/2”-5/8” and/or 1/4”-3/8” (1) Nut 1/2” and/or 1/4” (1)
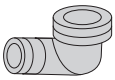	Elbow (2)
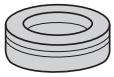	Plug (2) X 3
	Cable grommet (2) X2

[1] Only models 5 / 6 and 8
[2] Only models 10

Optional equipment

- ***2nd circuit kit*** (code UTW-KZSXE)
  for connecting 2 heating circuits.
- ***Regulation extension kit*** (code UTW-KREXD)
  to manage a 2nd heating circuit, telephone modem etc...
- ***DHW kit*** (code UTW-KDWXD)
  for connecting a mixed DHW tank (with built-in electrical backups).
- ***6 kW backup relay kit*** (code UTW-KBHXL)
  for switching to HP electrical backup of 3 to 6 kW.
- ***Boiler connection kit*** (code UTW-KBSXD)
  for connecting a boiler to the heat pump.
- ***Room thermostat*** (code UTW-C55XA),
  Wireless room thermostat (code UTW-C58XD)
  for correcting the ambient temperature.
- ***Remote control*** (code UTW-C74TXF or UTW-C74HXF),
  Wireless remote control (code UTW-C78XD)
  for correcting the ambient temperature and programming the heat pump.
- ***Cooling kit*** (code UTW-KCLXD).

Definitions

- Split: The heat pump consists of two elements (an outdoor unit to be installed outdoors and a hydraulic unit to be installed inside the dwelling).
- Air/water: The surrounding air is the energy source. This energy is transmitted to the heating circuit water by the heat pump.
- Inverter: The fan and compressor speeds are modulated according to the heating requirements. This technology enables you to save on energy and operate on a single-phase power supply, whatever the heat pump’s output, by avoiding pulling significant amounts of current at start-up.
- COP (Coefficient of Performance): This is the relationship between the energy transmitted to the heating circuit and consumed electrical energy.

Operating Range

This heat pump provides:

- Heating in winter,
- The management of electrical backups, for extra heating on the coldest days,

  or
- Installation with boiler connection* for extra heating on the coldest days,
- Management of two heating circuits*,
- Production of domestic hot water*.
- Cooling in summer* (for underfloor heating-cooling system or fan-convectors).

* : According options / require the use of additional kits
(see chapter “Required accessory” or “Optional equipment”).

General characteristics

Model		5	6	8	10
Rated heating performances (outdoor temp. / flow temp.)					
Heat output					
+7°C / +35°C - Underfloor heating system	kW	4.50	5.50	7.50	9.5
+7°C / +55°C - Radiator	kW	4.50	5.50	7.00	9
Power absorbed					
+7°C / +35°C - Underfloor heating system	kW	0.949	1.18	1.69	2.11
+7°C / +55°C - Radiator	kW	1.70	2.06	2.63	3.33
Coefficient of Performance (COP)	**(+7 °C / + 35 °C)**	**4.74**	**4.65**	**4.43**	**4.5**
Electrical specifications					
Electrical voltage (50 Hz)	V	230	230	230	230
Maximum current for appliance	A	13	13	18	19
Maximum current of the Heating system electrical backup (according option)	A	13 (26.1)	13 (26.1)	13 (26.1)	13 (26.1)
Power of the Heating system electrical backup (according option)	kW	3 (6 kW option available)			
Circulation pump actual power consumption	W	22	22	22	38
Maximum power consumed by the outdoor unit	W	3260	3260	4510	4760
Hydraulic Circuit					
Maximum operating pressure	MPa (bar)	0.3 (3)	0.3 (3)	0.3 (3)	0.3 (3)
Flow rate of the hydraulic circuit for Δt=4°C (rated conditions)	l/h	970	1185	1616	2047
Flow rate of the hydraulic circuit for Δt=8°C (rated conditions)	l/h	485	593	808	1024
Miscellaneous					
Weight of outdoor unit	Kg	39	39	42	62
Noise level at 5 m [1] (outdoor unit)	dB (A)	35	35	38	40
Sound power level in accordance with EN 12102 [2] (outdoor unit)	dB (A)	57	57	60	62
Weight of hydraulic unit (empty / full of water)	Kg	47 / 63	47 / 63	47 / 63	47 / 63
Water capacity of the hydraulic unit	l	16	16	16	16
Noise level at 1 m [1] (hydraulic unit)	dB (A)	32	32	32	32
Sound power level in accordance with EN 12102 [2] (hydraulic unit)	dB (A)	40	40	40	40
Heating system operating limits					
Outdoor temperature min/max	°C	-20 / +35	-20 / +35	-20 / +35	-20 / +35
Max. heating water flow temperature underfloor heating	°C	45	45	45	45
Max. heating water flow temperature low temperature radiator	°C	52	52	52	52
Refrigeration circuit					
Gas pipe diameters	Inches	1/2	1/2	1/2	5/8
Liquid Piping Diameters	Inches	1/4	1/4	1/4	3/8
Factory fill of refrigerant R32 [3]	g	970	970	1020	1630
Maximum operating pressure	MPa (bar)	4.2 (42)	4.2 (42)	4.2 (42)	4.2 (42)
Minimum / Maximum length of pipes [4 / 6]	m	3 / 15	3 / 15	3 / 15	3 / 20
Maximum length of pipes [5] / Maximum level difference	m	30 / 20	30 / 20	30 / 20	30 / 20

[1] Hydraulic unit: Sound pressure level at (x) m from the appliance, 1.5m off the ground, open field directionality 2 / Outdoor unit : Sound pressure level at (x) m from the device, halfway between the ground and top of the outdoor unit, open field directionality 2.

[2] The sound power level is a laboratory measurement of the emitted sound power. It does not correspond to a measurement of the perceived sound power.

[3] Refrigerant R32 as per NF EN 378.1 standard.

[4] Filling with refrigerant R32 is done at the factory.

[5] Taking into account a possible additional fill of refrigerant R32 (see *"Additional filling", page 32*).

[6] The announced thermal and acoustic performances are measured with 7.5m length refrigerant lines.

■ **Outdoor unit Model 5 & 6**

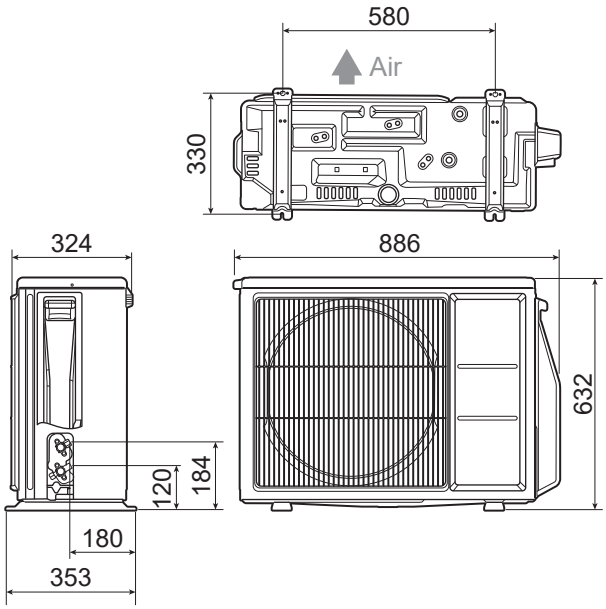

■ **Outdoor unit Model 8**

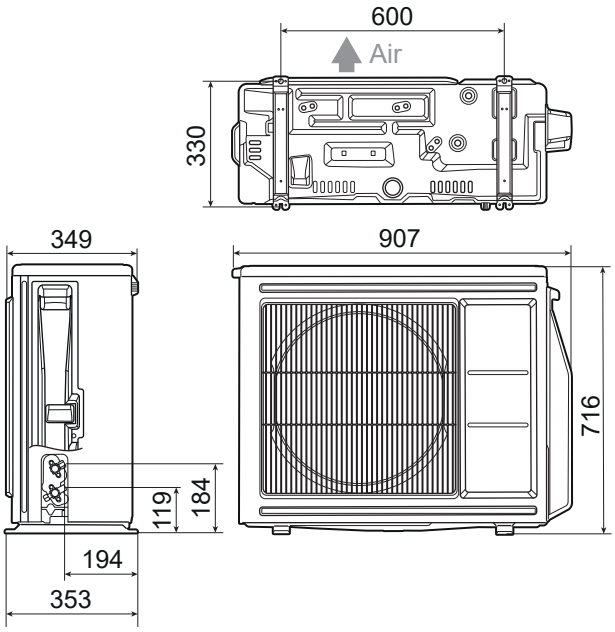

■ **Outdoor unit Model 10**

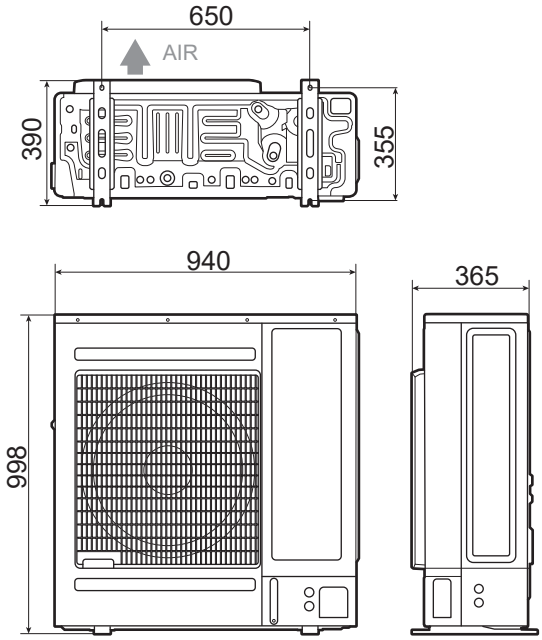

fig. 1 - Dimensions in mm

■ Hydraulic unit

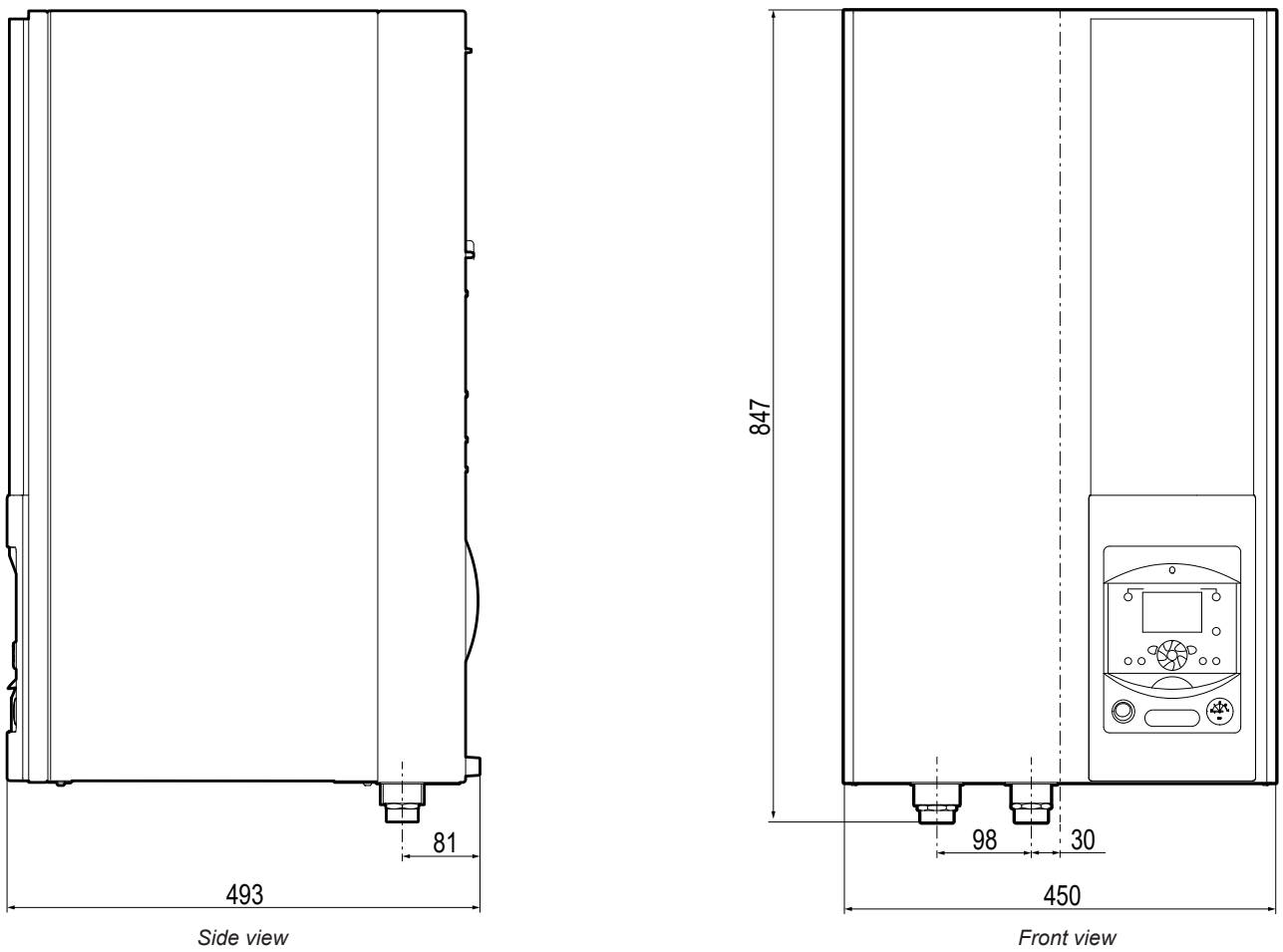

Space requirements of the hydraulic unit, see fig. 19, page 20.

fig. 2 - Dimensions in mm

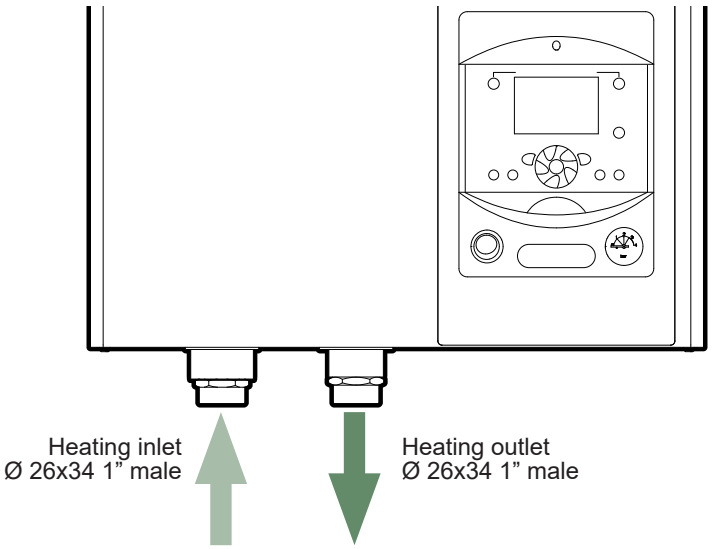

fig. 3 - Hydraulic connections

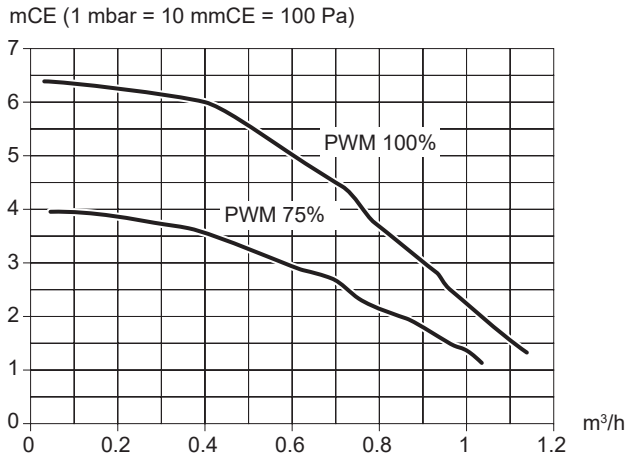

fig. 4 - Available hydraulic pressures and flow rates (models 5, 6 and 8)

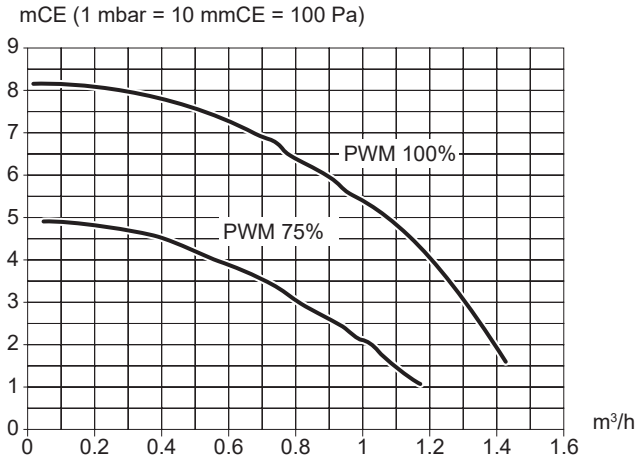

fig. 5 - Available hydraulic pressures and flow rates (model 10)

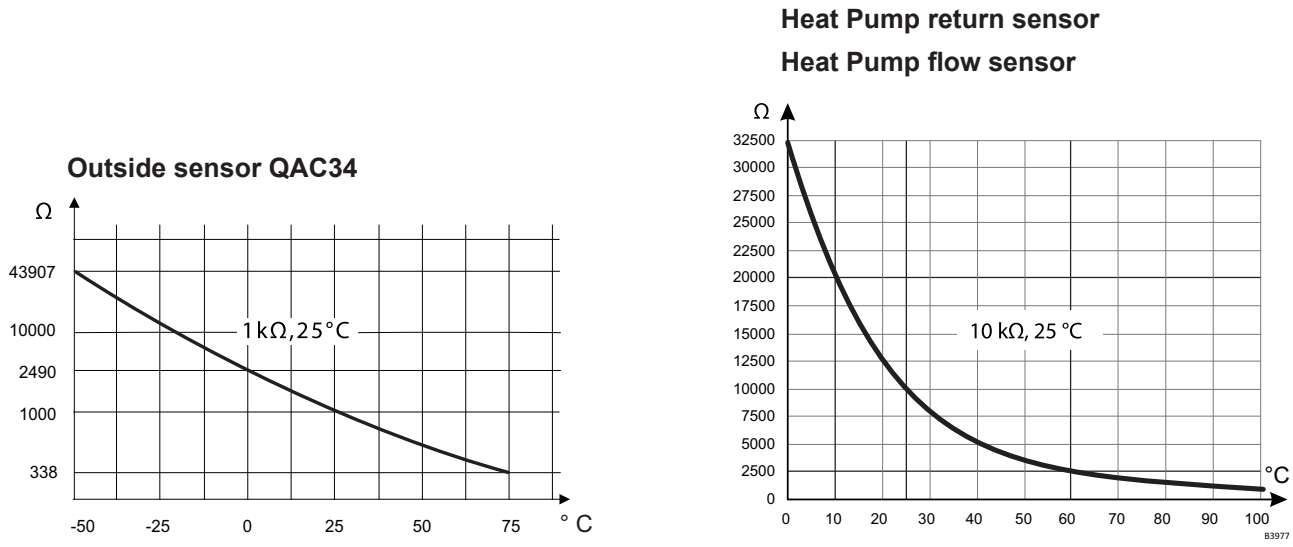

fig. 6 - Ohmic sensor values (Hydraulic unit)

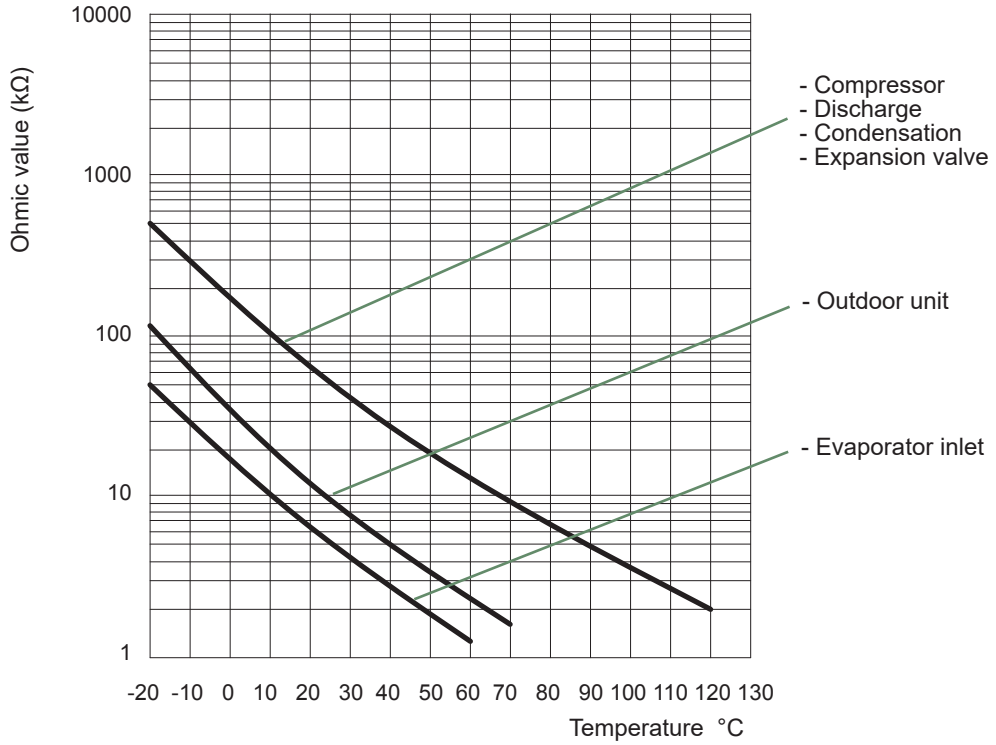

fig. 7 - Ohmic sensor values (Outdoor unit)

▶ Description

■ **Outdoor unit Model 5 & 6**

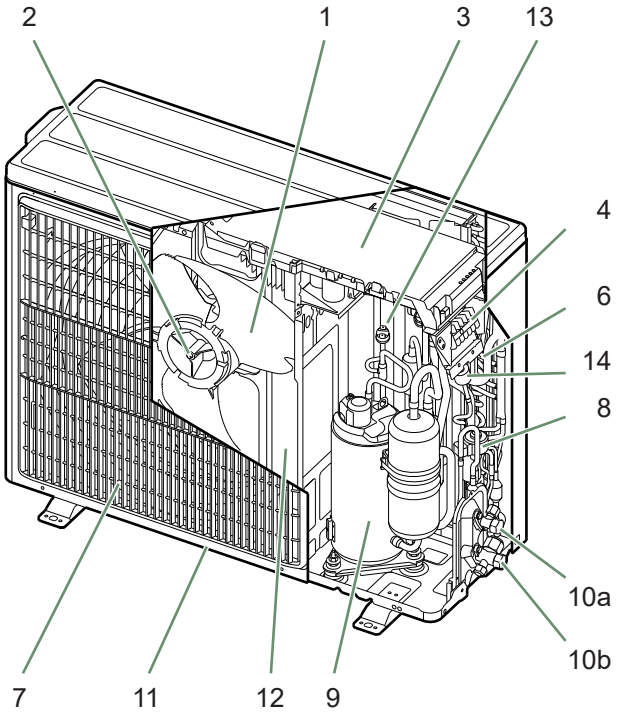

■ **Outdoor unit Model 8**

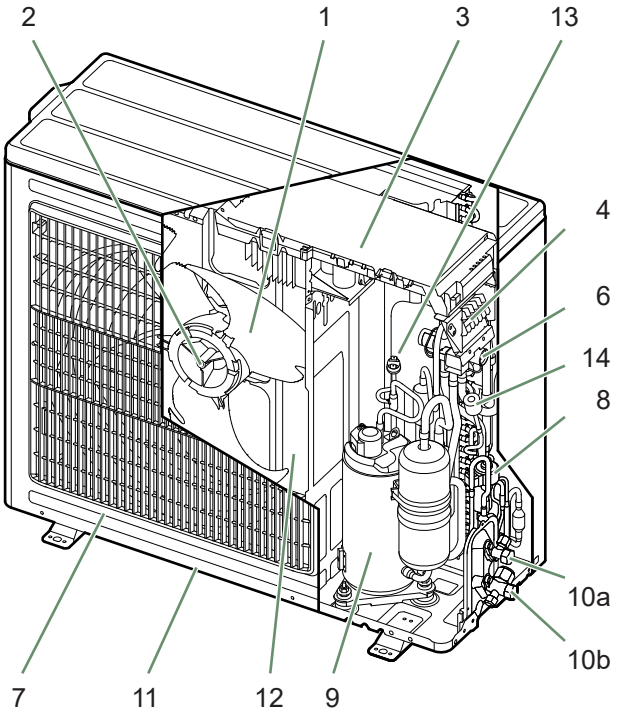

■ **Outdoor unit Model 10**

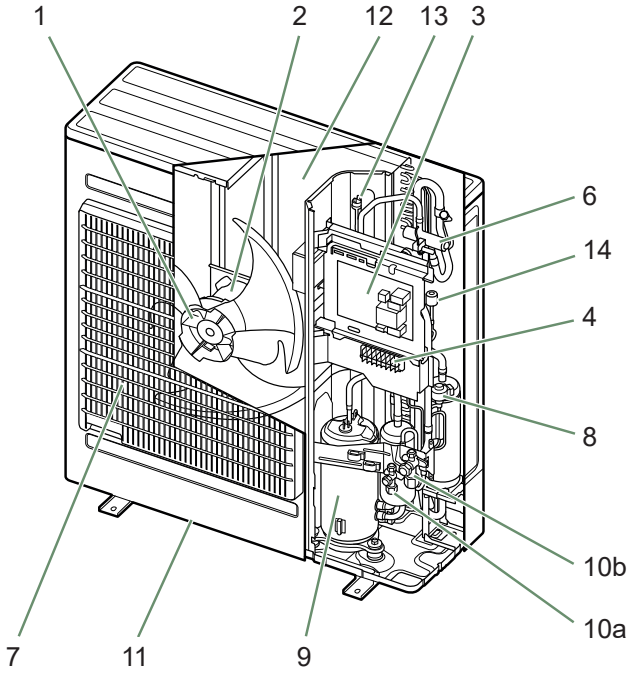

Key :

1. High performance and low noise impeller.
2. Electrical motor with variable "Inverter" operation.
3. "Inverter" control unit.
4. Connection terminal blocks (power supply and interconnection).
6. 4-way valve.
7. Anti-corrosion treated bodywork.
8. Main circuit electronic expansion valve.
9. Noise and thermally insulated "Inverter" compressor.
10. Refrigeration connection valves (flared connectors) with protective caps (a: liquid; b: gas).
11. Holding tank with condensate drain hole.
12. High-performance exchange surface evaporator; anti-corrosion treated hydrophilic aluminium fins and grooved copper tubes.
13. Pressure Switch
14. Pressure sensor

fig. 8 - Outdoor unit components

■ Hydraulic unit

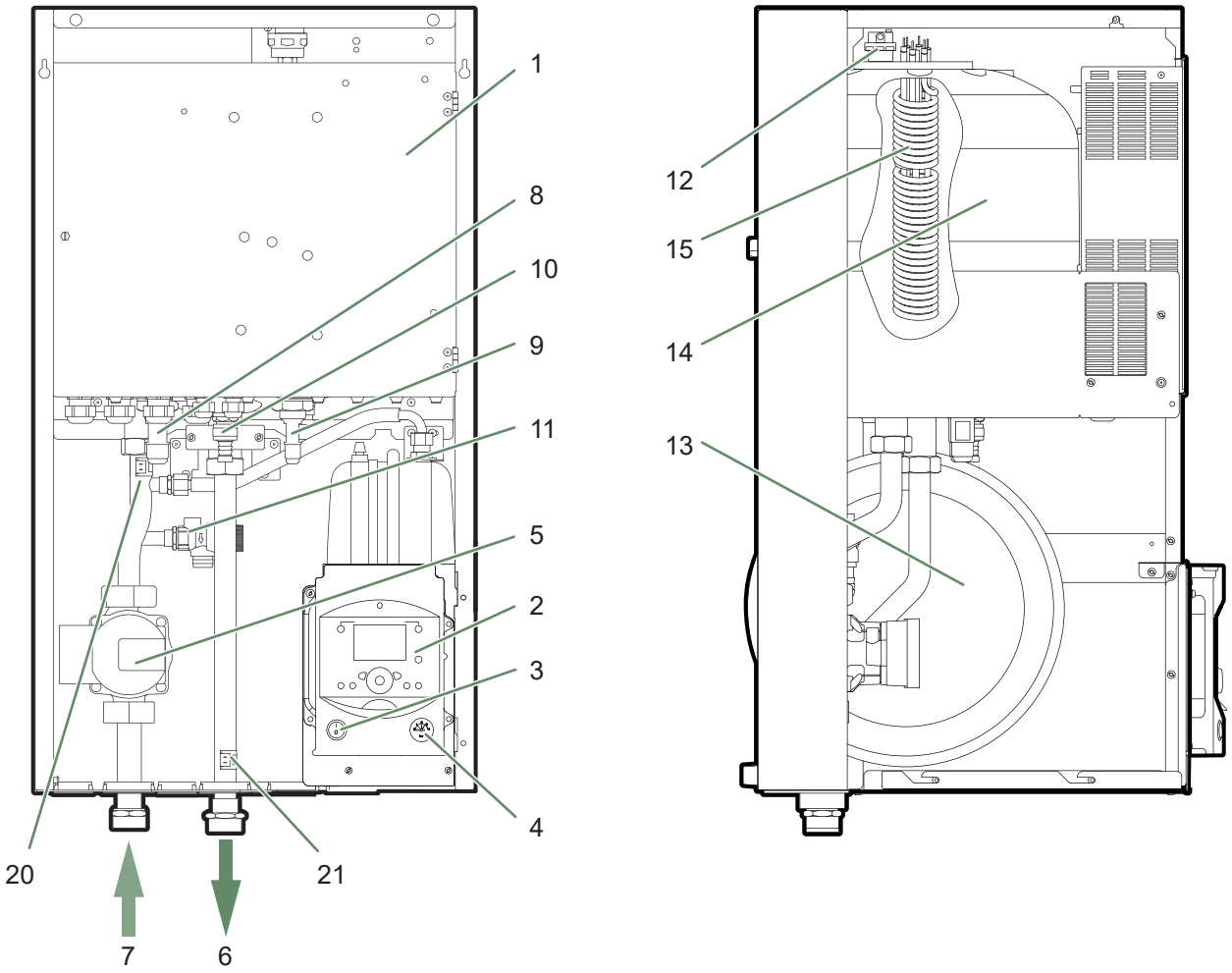

Key :

1. Electric control box.
2. Controller / User interface.
3. ON/OFF Switch.
4. Pressure gauge.
5. Hydraulic unit circulation pump.
6. Heating outlet
7. Heating inlet
8. "Gas" refrigeration connection.
9. "Liquid" refrigeration connection.
10. Drain valve.
11. Safety valve.
12. Automatic bleeder valve.
13. Expansion vessel.
14. Condenser.
15. Heat Pump electrical backup.

Sensors :

20. Heat Pump return sensor.
21. Heat Pump flow sensor.

fig. 9 - Hydraulic unit components

▶ Operating principle

The heat pump transmits the energy contained in the surrounding air into the dwelling to be heated.

The heat pump consists of four main elements, in which a refrigerant (R32) circulates

- In the evaporator (ref. **12**, fig. 8, page 12) : The calories are taken from the outside air and transmitted to the refrigerant. Because it has a low boiling point, it changes from a liquid to a vapour, even in cold weather (down to -25°C outside temperature).
- In the compressor (ref. **9**, fig. 8, page 12) : The vaporised refrigerant is pressurised and takes on even more calories.
- In the condenser (ref. **15**, fig. 9, page 13) : The energy of the refrigerant is transmitted to the heating circuit. The refrigerant returns to its liquid state.
- In the expansion valve (ref. **8**, fig. 8, page 12) : The liquefied refrigerant is returned to a low pressure and regains its initial temperature and pressure.

The heat pump is equipped with a controller which controls the room temperature based on the outdoor temperature measurement. The room thermostat (option) provides a corrective action for the temperature control.

The hydraulic unit is fitted with an electrical backup* or boiler connection* which intervenes to provide additional heat during the coldest periods.

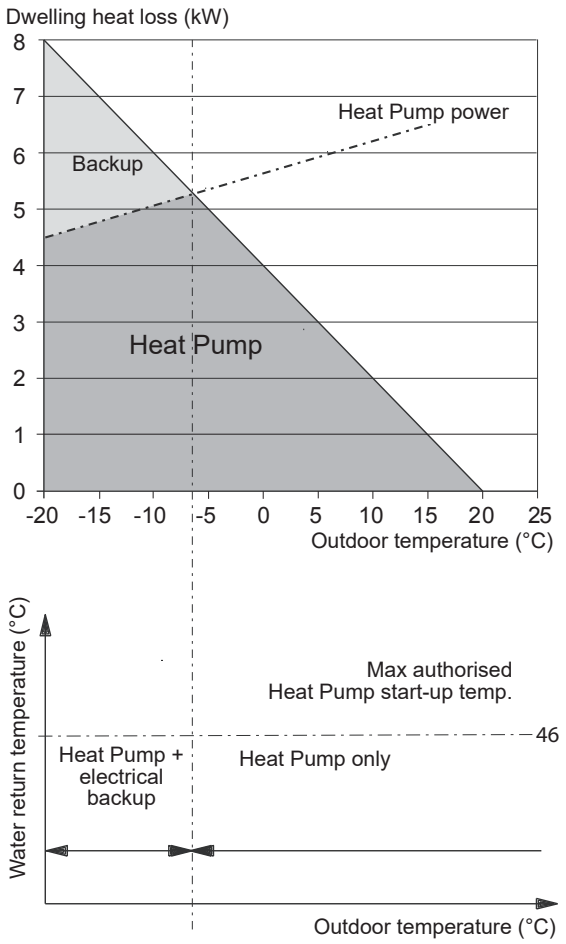

fig. 10 - Examples and operating limits

■ Control functions

- The heating circuit's flow temperature is controlled by the temperature control.
- Depending on the heating flow temperature, the outdoor unit's power is modulated by the "Inverter" compressor.
- Control of the backup electrical heating.
- The daily timer program is used to set the periods where the ambient temperature is comfortable or reduced.
- Summer/winter time mode switchover is automatic.
- Management of the boiler backup*.
- Room sensor*: The room sensor provides a corrective action for the temperature control.
- Control of a second heating circuit*.
- Domestic hot water*: Heating timer program.
- Managing cooling*.

■ Protective functions

- Anti-legionella cycle for domestic hot water*.
- Anti-corrosion tank protection with titanium anode (ACI)*.
- Frost protection: Frost protection cuts in if the heating circuit's flow temperature falls below 5°C (provided that the heat pump's electrical power supply is not interrupted).

■ Domestic hot water (DHW) operating principle*

Two domestic hot water (DHW) temperatures can be set: comfort and reduced.

The default DHW program is set to the comfort temperature between 00:00 and 05:00 and between 14:30 and 17:00 and to the reduced temperature for the rest of the day. This optimises electrical consumption while ensuring comfortable water temperatures.

The reduced temperature setpoint may be useful to avoid restarting the DHW too often and for too long during the day.

The production of domestic hot water (DHW) is started when the temperature in the tank drops to 7°C below the temperature setpoint.

The heat pump produces the domestic hot water, which is then additionally heated, if required, by the tank's electrical backup or by the boiler. To ensure a DHW setpoint over 55°C, the electrical backup heating must be left on.

If the contract signed with the energy provider includes a day/night tariff, the electrical backup is subject to the supplier's power tariff and the comfort temperature may only be reached at night.

If no particular contract has been signed, the comfort temperature can be reached at any time, including during the day.

The production of DHW takes priority over heating; nevertheless the production of DHW is managed by cycles that regulate the amount of time assigned to heating and production of DHW in the event of simultaneous demand.

Anti-legionella cycles can be programmed.

■ Fan convectors with integrated control system

Do not use a room sensor in the area in question.

* Where the heat pump is fitted with options and associated kits.

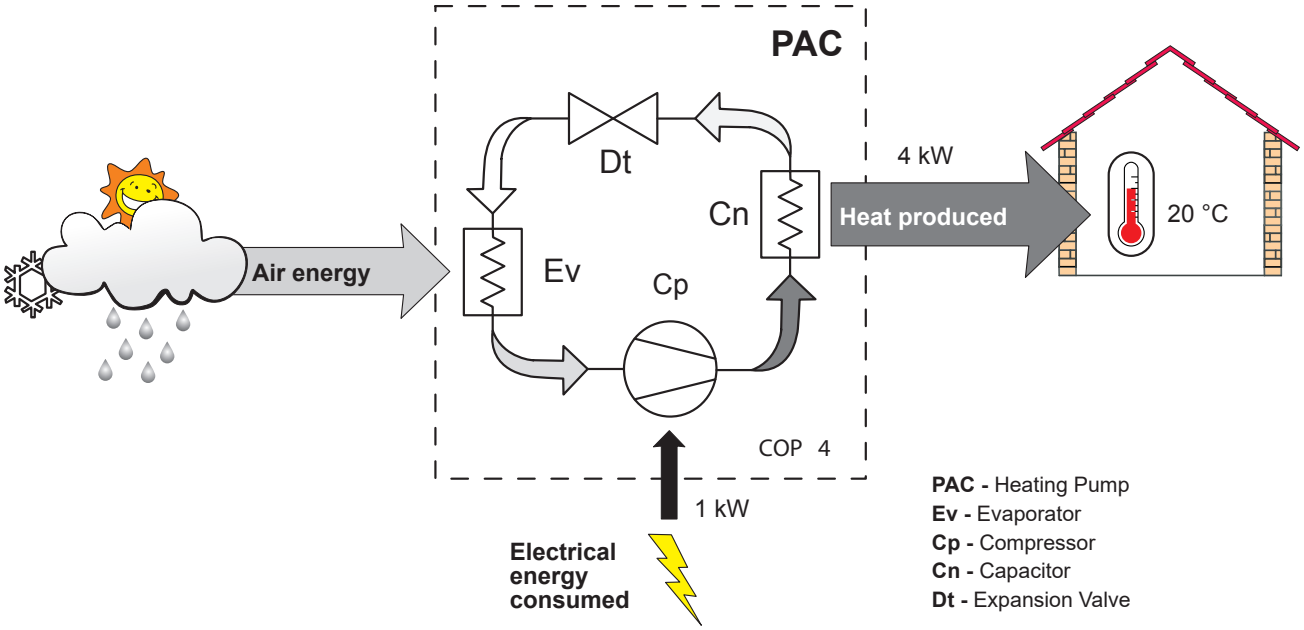

fig. 11 - Heat pump operating principle

Installation of refrigeration connections

Bend the pipes into position and make holes for them through the floor or walls either with their protective caps in place or after brazing.

Keep the protective caps in place or ends brazed until the appliance is commissioned.

The outdoor unit must be connected to the hydraulic unit ONLY with brand new separately insulated copper connections (refrigerant quality).

Maintain the same pipe diameters (fig. 32).

Observe the maximum and minimum distances between the hydraulic unit and the outdoor unit (fig. 32, page 30) the guarantee of performance and the service lifespan of the system depend on this.

The minimum length of the refrigeration connections for correct operation is 3 m.

The appliance's warranty will be void if it is operated with refrigeration connections less than 3 m long (tolerance +/- 10%).

Ensure that the refrigeration connections are protected from physical deterioration.

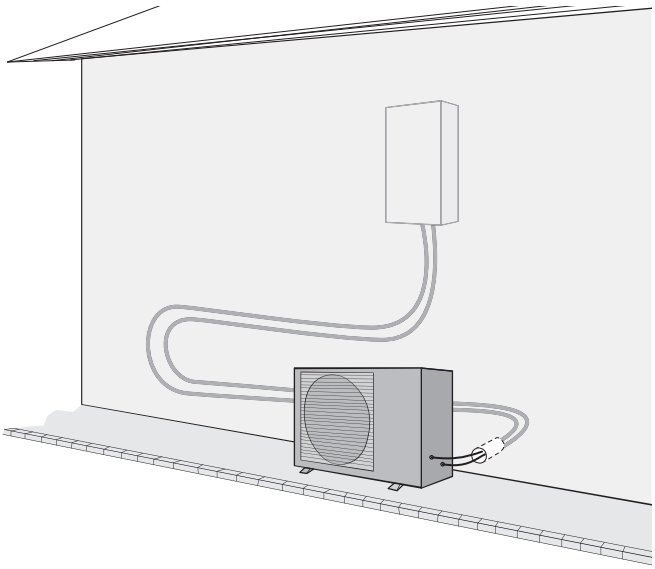

fig. 12 - Example of recommendation for layout of refrigeration connections

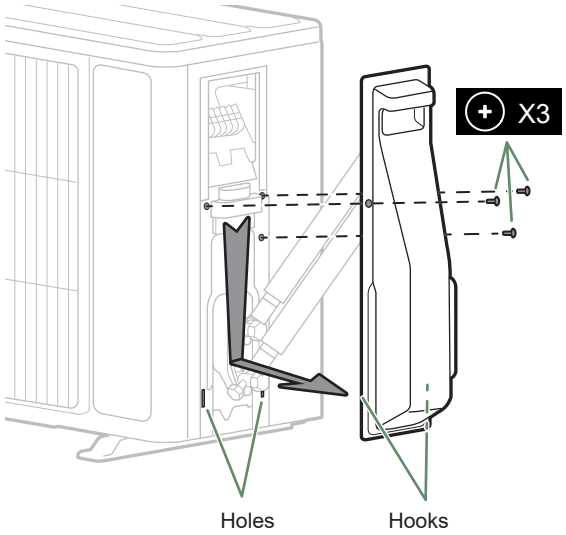

fig. 13 - Open the outdoor unit model 5, 6 & 8

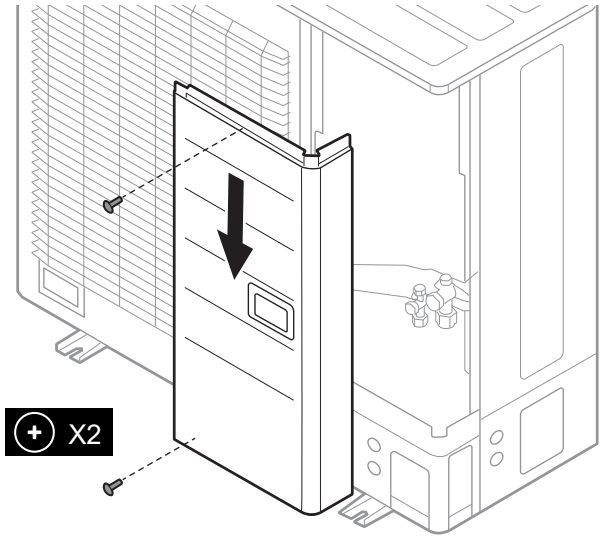

fig. 14 - Open the outdoor unit model 10

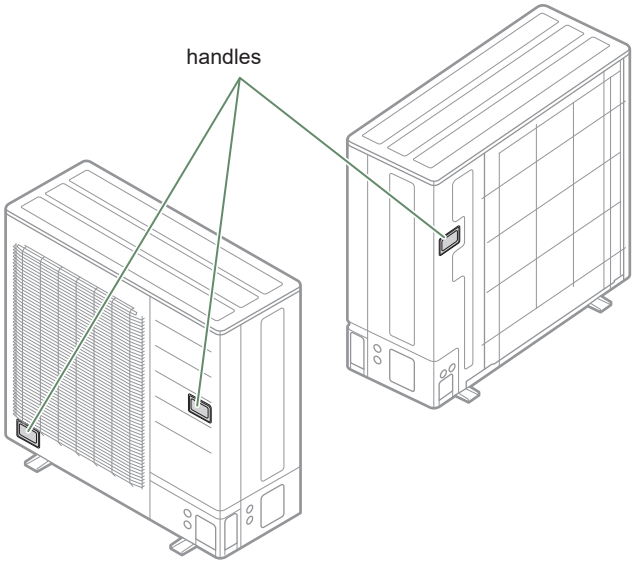

fig. 15 - Transport of the outdoor unit model 10

▶ Installation of the outdoor unit

▼ Installation precautions

⚠ **The outdoor unit must only be installed outside. If a shelter is required, it must have broad openings on all 4 sides and installation clearances must be observed.**

- Choose the location of the appliance after discussion with the client.
- We recommend choosing a site that is sunny but sheltered from strong cold prevailing winds.
- The unit must be easily accessible for future installation and maintenance work (*fig. 16 and fig. 17, page 18*).
- Ensure that connections to the hydraulic unit can be made easily.
- The outdoor unit is able to withstand bad weather but avoid installing it in a position where it is likely to be exposed to significant dirt or flowing water (under a defective gutter for example).
- Water may flow out of the outdoor unit when it is operating. Do not install the outdoor unit on a paved terrace; choose a well-drained location (e.g. gravel or sand). If installation is carried out in an area where the temperature stays below 0°C for long periods, check that the presence of ice does not present any danger. A drain pipe can also be connected to the condensate drain pan (optional) (fig. 18, page 19).
- Nothing should obstruct the air circulation through the evaporator and out from the fan (*fig. 16 and fig. 17, page 18*).
- Keep the outdoor unit away from heat sources and flammable products.
- Make sure that the unit does not disturb the surrounding area or inhabitants (noise level, draught, low temperature of the ejected air freezing the plants in its path.

■ **Models 5, 6 & 8**

A ≥ 100 mm	**G** ≥ 600 mm
B ≥ 200 mm	**H** ≥ 1000 mm
C ≥ 250 mm	**J** ≥ 1500 mm
D ≥ 300 mm	**K** ≥ 2000 mm
E ≥ 400 mm	**L** = 200 mm max
F ≥ 500 mm	**M** = 300 mm max

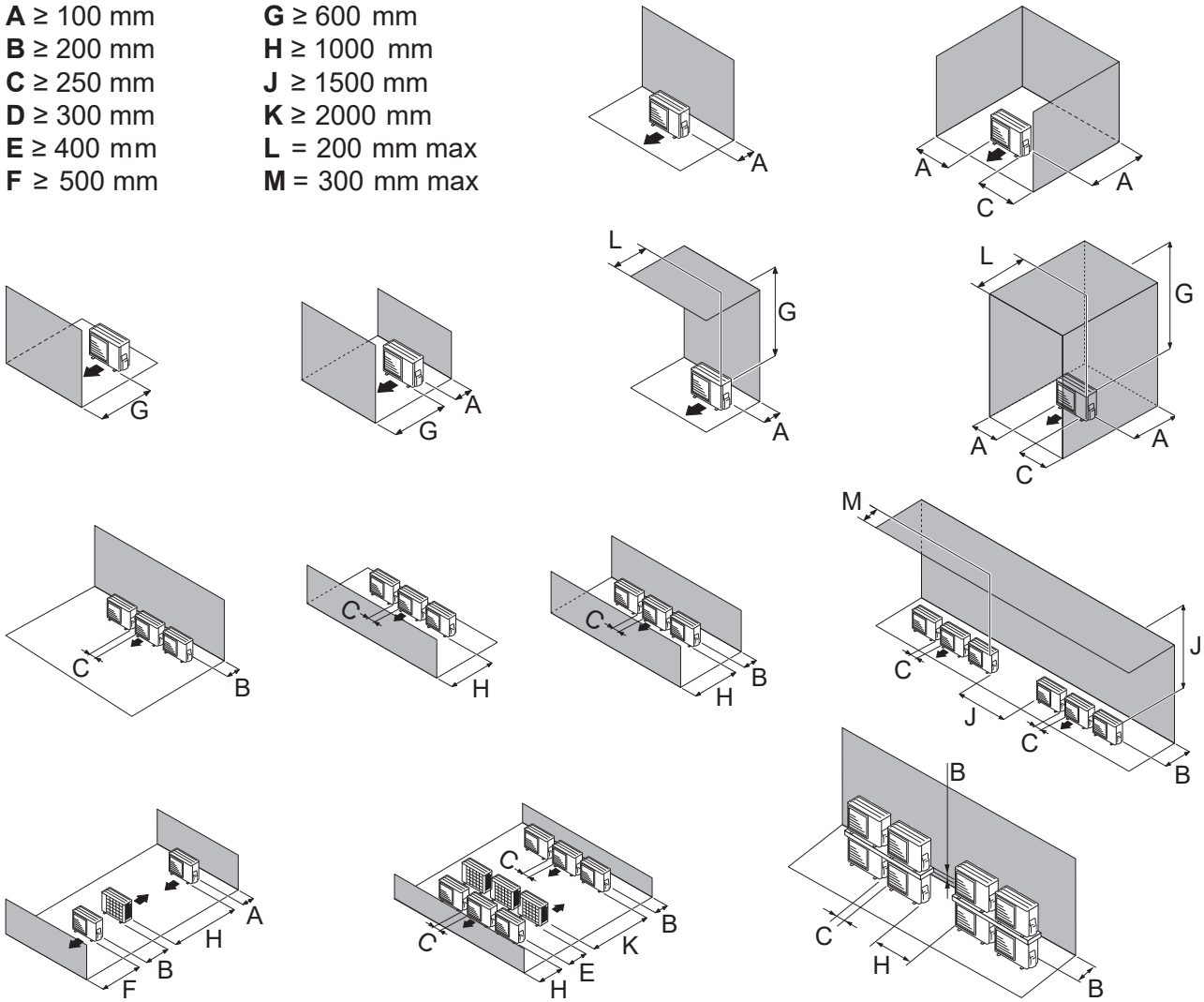

fig. 16 - Minimum installation clearances around the outdoor unit (model 5, 6 & 8)

■ **Model 10**

A ≥ 100 mm
B ≥ 150 mm
C ≥ 200 mm
D ≥ 250 mm
E ≥ 300 mm
F ≥ 500 mm
G ≥ 600 mm

H ≥ 1000 mm
J ≥ 1500 mm
K ≥ 3000 mm
L ≥ 3500 mm
M = 300 mm max
N = 500 mm max

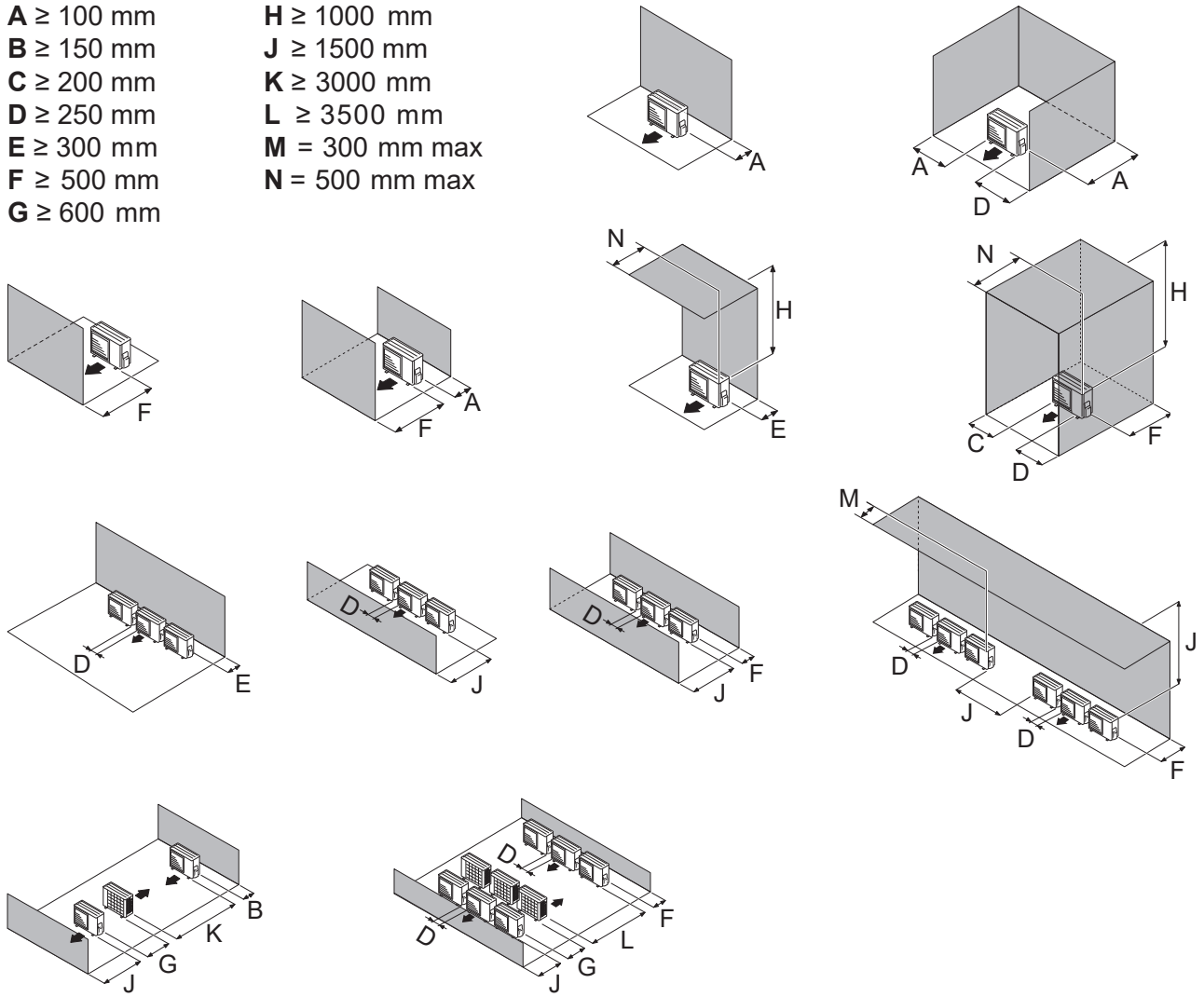

fig. 17 - Minimum installation clearances around the outdoor unit (model 10)

- The surface on which the appliance is installed must:
- Be permeable (soil, gravel, etc.).
- Be perfectly flat,
- Support its weight easily.
- Allow a solid fastening base,
- Not transmit any vibration to the dwelling. Anti-vibratory blocks are available as an option.
- The wall bracket cannot be used where it is likely to transmit vibrations. Installing the unit on the ground is preferred.

▼ Positioning Outdoor Unit

The outdoor unit must be raised at least 50 mm above ground level. In areas prone to snow, this height should be increased but should not exceed 1.5 m

- Fasten the outdoor unit by means of screws and rubber tightening or toothed lock washers to prevent them from coming loose.

⚠ **In areas with heavy snowfall, if the inlet and outlet of the outdoor unit are blocked with snow, heating may become difficult and a failure is likely to occur.**

Construct a canopy or place the unit on a high stand (local configuration).

- Place the unit on a solid stand in order to minimise impacts and vibrations.
- Do not place the unit directly on the ground as this will cause problems.

▼ Condensate drain pipe

⚠ **The outdoor unit can generate a large volume of water (called condensate).**

- If the use of a drain pipe is necessary (e.g., superposition of the outdoor units):
- Install the condensate drain pan (optional) for models 5, 6 & 8 only. Use the elbow provided © and connect a 16 mm-diameter hose for draining the condensate.
- Use the plug(s) provided (B) to block the opening of the condensate drain pan (model 10).

Allow for the condensate to flow away under the force of gravity (waste water, rain water, gravel bed).

⚠ **If installation is carried out in an area where the temperature stays below 0°C for long periods, equip the drain pipe with trace heating to avoid it icing up. Trace heating must heat not only the drain pipe but also the bottom of the appliance's condensate collection tank.**

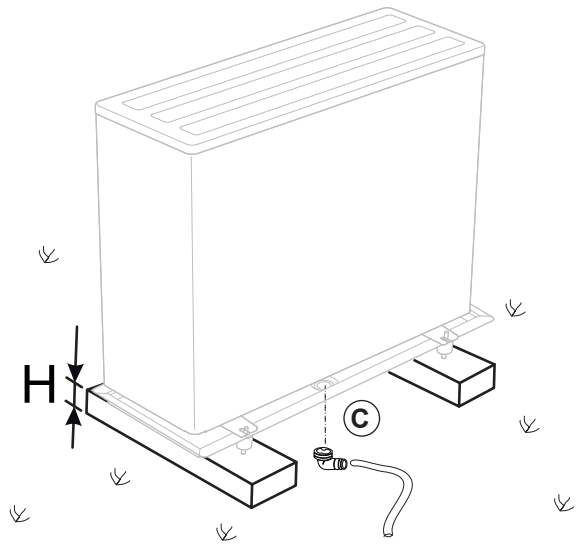

* In areas with heavy snowfall,
(H) must be higher than the average snow layer.

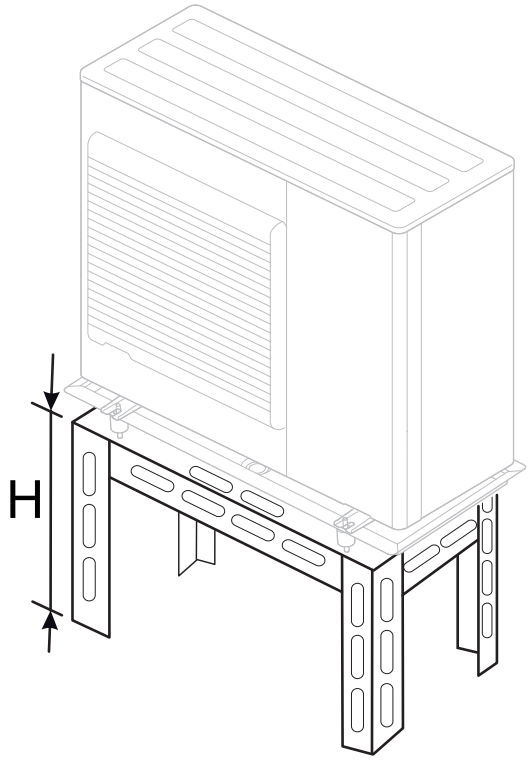

Model 10 only

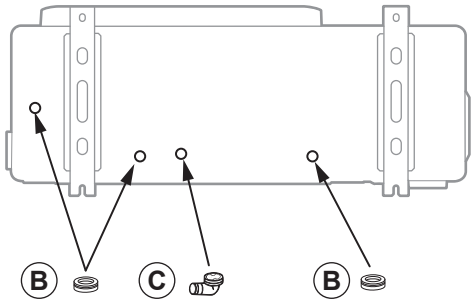

fig. 18 - Installation of the outdoor unit evacuation of condensates

▶ Installation of the hydraulic unit

Heat sources such as :

- Open flame,
- High temperature surface >700°C (filament),
- Electrical circuit breaker >5kVA,

Avoid using sources of heat inside the room where the heat pump is installed. If this is not possible, see page 24

▼ Installation precautions

- Choose the location of the appliance after discussion with the client.
- The installation space should comply with current regulations.
- To facilitate maintenance and allow access to the various parts, we recommend that you provide sufficient space all the way around the hydraulic unit (fig. 19).

Other cautions

Be careful not to bring flammable gas near the heat pump during installation, in particular when brazing is required. The appliances are not fireproof and should not therefore be installed in an explosive environment.

To prevent risks of humidity in the exchanger, it is pressurized with nitrogen.

- To avoid condensation inside the condenser, remove the refrigeration circuit caps **only when making the refrigeration connections**.
- If the refrigeration connection is only performed at the end of the installation, make sure that the refrigeration circuit caps* remain in place and tight throughout the installation.

* (Hydraulic unit side and outdoor unit side).

- After each maintenance operation on the refrigeration circuit and before the final connection, take care to put the caps back in position to avoid any pollution of the refrigeration circuit (sealing with adhesive is prohibited).

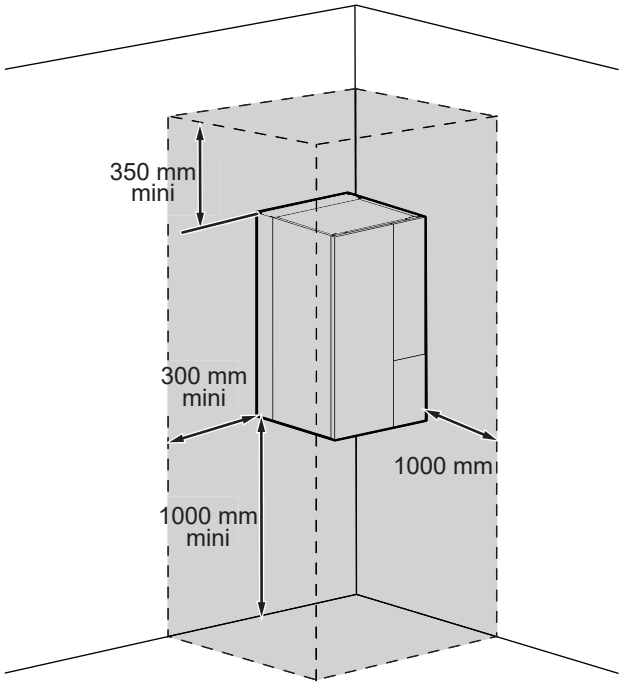

fig. 19 - Minimum installation clearances around the hydraulic unit for maintenance

▼ Minimum room volume

In accordance with EN 378-1 -2017 standard (Refrigerating systems and heat pumps - Safety and environmental requirements), the system's hydraulic unit and all refrigeration connections passing through inhabited areas must comply with the minimum room volume requirements shown hereafter (voir *fig. 20*) :

The minimum volume of a room (in m3) is calculated using the formula: "fluid fill load" (in kg) / 0.3.

Alternatively, you must ensure that :

- The location has natural ventilation through another room where the combined volume of the two rooms is greater than "liquid fill load" (in kg) / 0.3kg/m³. Ventilation between the two rooms is ensured by openings of at least: see *fig. 21* and *fig. 22*.
- Or that the location is mechanically ventilated:
  - Minimum flow rate of 165m3/H;
  - Extraction at less than 0.20m from the floor.

Refrigeration connections Length			Modele (kW)		
			5, 6	8	10
15 m	R32 gas charge	g	970	1020	1630
	min room volume	**m³**	**3.2**	**3.4**	**5.4**
16 m	R32 gas charge	g	995	1045	1630
	min room volume	**m³**	**3.3**	**3.5**	**5.4**
17 m	R32 gas charge	g	1020	1070	1630
	min room volume	**m³**	**3.4**	**3.6**	**5.4**
20 m	R32 gas charge	g	1095	1145	1630
	min room volume	**m³**	**3.65**	**3.8**	**5.4**
21 m	R32 gas charge	g	1120	1170	1650
	min room volume	**m³**	**3.73**	**3.9**	**5.5**
22 m	R32 gas charge	g	1145	1195	1670
	min room volume	**m³**	**3.82**	**3.98**	**5.57**
23 m	R32 gas charge	g	1170	1220	1690
	min room volume	**m³**	**3.9**	**4.1**	**5.6**
25 m	R32 gas charge	g	1220	1270	1730
	min room volume	**m³**	**4.1**	**4.2**	**5.8**
30 m	R32 gas charge	g	1345	1395	1830
	min room volume	**m³**	**4.5**	**4.7**	**6.1**

fig. 20 - Minimum room volume

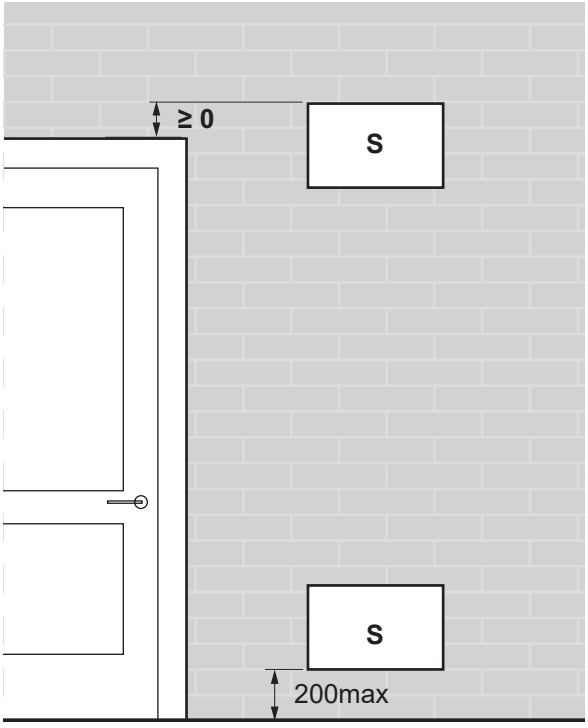

fig. 22 - Position of openings for ventilation

Room volume (m³)	*1.0*	*1.5*	*2.0*	*2.5*	*3.0*	*3.5*	*4.0*	*4.5*	*5.0*	*5.5*	*6.0*	*6.5*
Refrigerant Amount (g)	**Minimal section (S) of the opening (cm²)**											
970	**500**	**350**	**250**	**200**	**200**							
1000	**550**	**350**	**300**	**250**	**200**							
1100	**600**	**400**	**300**	**250**	**200**	**200**						
1170	**600**	**400**	**300**	**250**	**200**	**200**						
1300	**700**	**450**	**350**	**300**	**250**	**200**	**200**					
1400	**750**	**500**	**400**	**300**	**250**	**250**	**200**	**200**				
1500	**800**	**550**	**400**	**350**	**300**	**250**	**200**	**200**	**200**			
1600	**850**	**550**	**450**	**350**	**300**	**250**	**250**	**200**	**200**			
1700	**900**	**600**	**450**	**350**	**300**	**250**	**250**	**200**	**200**	**200**		
1800	**950**	**650**	**500**	**400**	**350**	**300**	**250**	**250**	**200**	**200**	**200**	
1840	**950**	**650**	**500**	**400**	**350**	**300**	**250**	**250**	**200**	**200**	**200**	

No requirement

fig. 21 - Section of the opening

▼ With Heat sources

Heat sources such as :
- Open flame,
- High temperature surface >700°C (filament),
- Electrical circuit breaker >5kVA,

In accordance with IEC 60-335-2-40 standard, the hydraulic module of the heat pump as well as all the refrigerant connections that cross the inhabited area must be installed in rooms respecting the minimum surface (*fig. 24*).

Depending on the total coolant load (heat pump + links + additional load):

if the minimal surface area (*fig. 24*) cannot be complied with, follow the instructions in *fig. 26* to take into account the surface areas of adjoining rooms and the creation of ventilation points (see *fig. 23* and *fig. 25*).

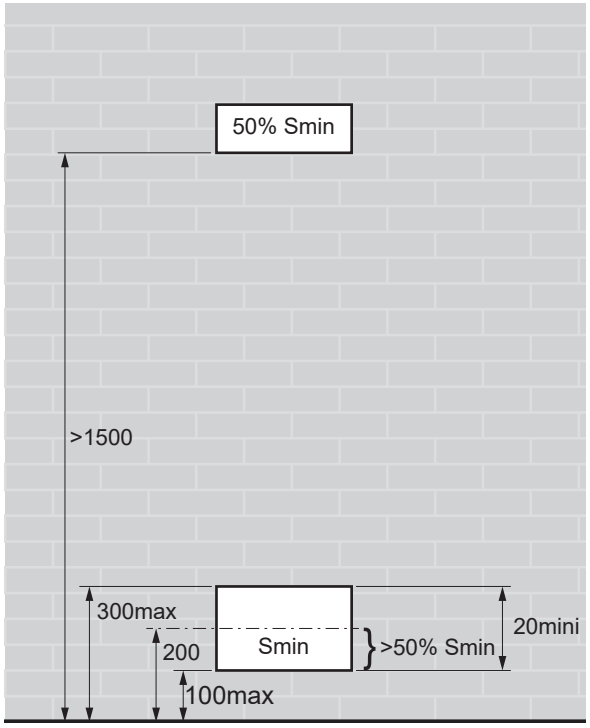

fig. 23 - Position of openings for ventilation

Refrigeration connections Length			Modele (kW)		
			5, 6	8	10
15 m	R32 gas charge	g	970	1020	1630
	min room Surface	**m²**	**4.21**	**4.43**	**8.14**
16 m	R32 gas charge	g	995	1045	1630
	min room Surface	**m²**	**4.32**	**4.54**	**8.14**
17 m	R32 gas charge	g	1020	1070	1630
	min room Surface	**m²**	**4.43**	**4.65**	**8.14**
20 m	R32 gas charge	g	1095	1145	1630
	min room Surface	**m²**	**4.76**	**4.97**	**8.14**
21 m	R32 gas charge	g	1120	1170	1650
	min room Surface	**m²**	**4.86**	**5.08**	**8.43**
22 m	R32 gas charge	g	1145	1195	1670
	min room Surface	**m²**	**4.97**	**5.19**	**8.54**
23 m	R32 gas charge	g	1170	1220	1690
	min room Surface	**m²**	**5.08**	**5.30**	**8.75**
25 m	R32 gas charge	g	1220	1270	1730
	min room Surface	**m²**	**5.30**	**5.52**	**9.17**
30 m	R32 gas charge	g	1345	1395	1830
	min room Surface	**m²**	**5.84**	**6.06**	**10.26**

fig. 24 - Minimum room surface

Surface of Room **A** *(m²)*	*0.8*	*1.0*	*1.5*	*2.0*	*2.5*	*3.0*	*3.5*	*4.0*	*4.5*	*5.0*	*5.5*	*6.0*	*6.5*	*7.0*	*7.5*
Refrigerant Amount (g)	**Minimal section (Smin) of the low opening (cm²)**														
970	**246**	**232**	**196**	**160**	**124**	**88**	**51**	**15**	**-**	**-**	**-**	**-**	**-**	**-**	**-**
1000	**256**	**241**	**205**	**169**	**133**	**97**	**61**	**25**	**-**	**-**	**-**	**-**	**-**	**-**	**-**
1100	**287**	**273**	**236**	**200**	**164**	**128**	**92**	**56**	**20**	**-**	**-**	**-**	**-**	**-**	**-**
1170	**309**	**294**	**258**	**222**	**186**	**150**	**114**	**78**	**42**	**6**	**-**	**-**	**-**	**-**	**-**
1300	**350**	**335**	**299**	**263**	**227**	**191**	**155**	**119**	**83**	**47**	**11**	**-**	**-**	**-**	**-**
1400	**381**	**367**	**330**	**294**	**258**	**222**	**186**	**150**	**114**	**78**	**42**	**6**	**-**	**-**	**-**
1500	**412**	**398**	**362**	**326**	**290**	**254**	**218**	**181**	**145**	**109**	**73**	**37**	**14**	**-**	**-**
1600	**444**	**429**	**393**	**357**	**321**	**285**	**249**	**213**	**177**	**141**	**105**	**68**	**46**	**29**	**12**
1700	**475**	**461**	**424**	**388**	**352**	**316**	**280**	**244**	**208**	**172**	**136**	**100**	**77**	**61**	**45**
1800	**506**	**492**	**456**	**420**	**384**	**348**	**312**	**275**	**239**	**203**	**167**	**131**	**109**	**93**	**78**
1840	**519**	**504**	**468**	**432**	**396**	**360**	**324**	**288**	**252**	**216**	**180**	**144**	**122**	**106**	**91**

fig. 25 - Minimal section of the opening

Min. room surface
See fig. 24

Min. room surface ____ m^2

Room surface (**A**) ____ m^2

Room surface (**A**) > Min. room surface ?
Yes ☐ No ☐

Yes → **No requirement**

No → **Indoor unit in an unoccupied area**

Yes ☐ No ☐

Yes → **Create opening (Smin) for natural ventilation to the outside**
See fig. 23 & fig. 25

No →

Adjacent room surface

Adjacent room surface (**B**) ____ m^2

Total surface (**A**+**B**) ____ m^2

Room surface (**A**+**B**) > Min. room surface ?
Yes ☐ No ☐

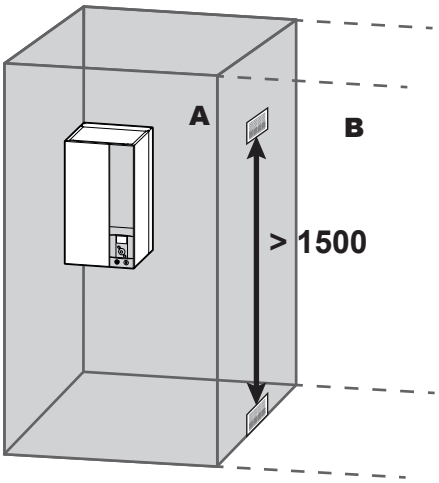

Yes → **Create opening (Smin) for natural ventilation into A and B room**
See fig. 23 & fig. 25

No → **Add a detector and a mechanical ventilation**

fig. 26 - Minimum room surface

▼ Positioning the hydraulic unit

- Fix the bracket **S** securely (4 screws and plugs) to a strong, flat wall ensuring that it is correctly levelled. If weak partition wall, install reinforcements (metal or wood), use a suitable fastening system.
- Hook the appliance onto its bracket **S**.

Weight of hydraulic unit (full of water) 63 Kg.

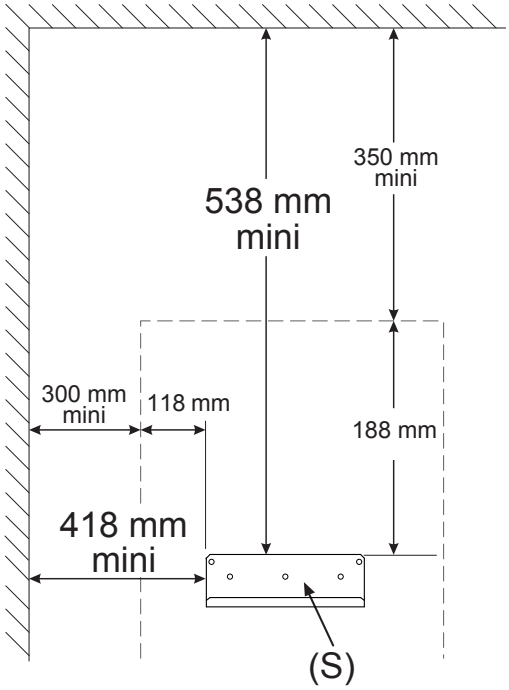

fig. 27 - Mounting bracket

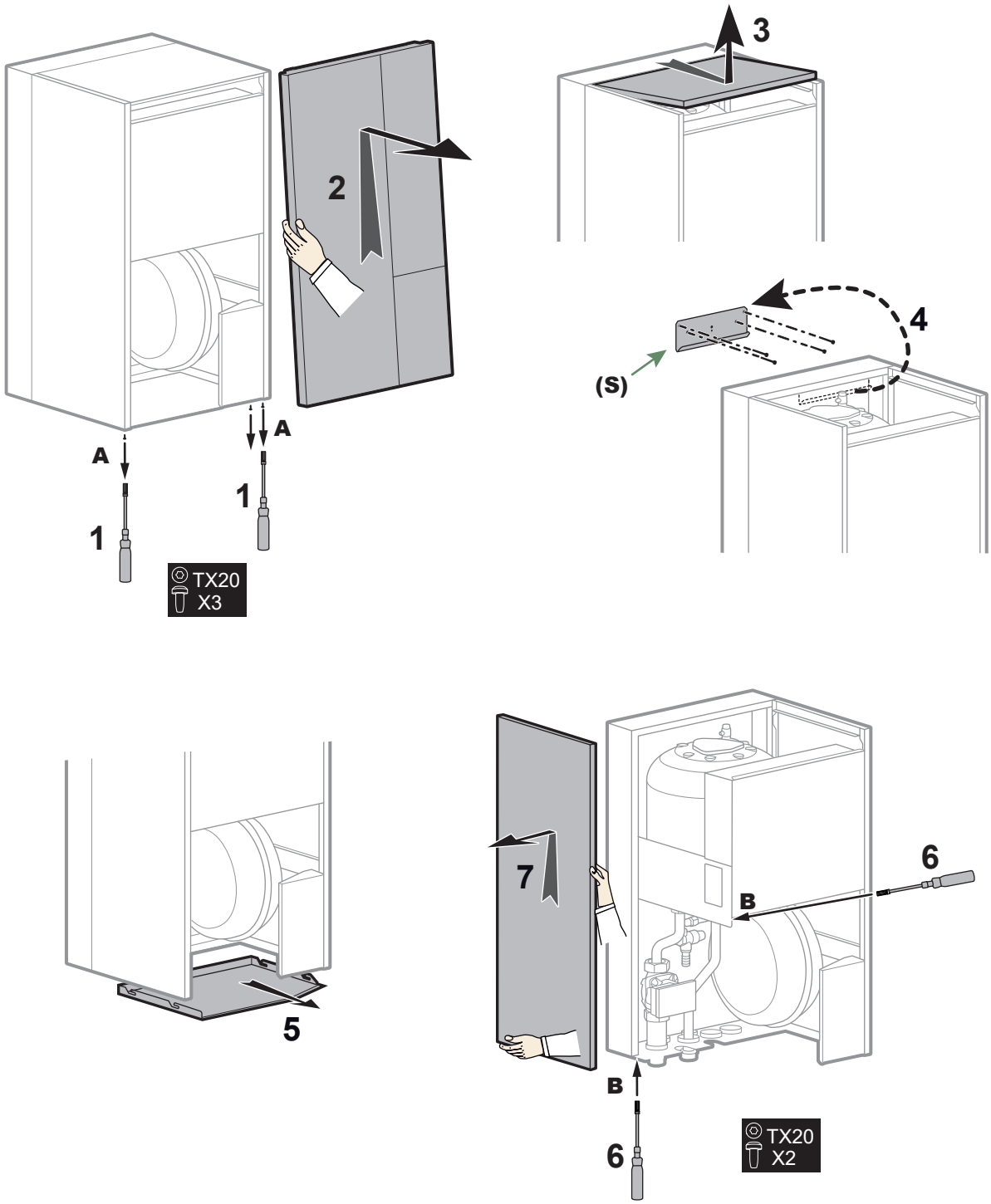

fig. 28 - Removing the case

Refrigeration connections

This appliance uses refrigerant R32.

Comply with the legislation on handling of refrigerants.

Rules and precautions

Connections must be made on the same day the installation is filled with gas (see para. *"Filling the installation with gas", page 74*).

• Minimum tools required

- Set of pressure gauges (*Manifold*) with hoses exclusively designed for HFCs (Hydrofluorocarbons).
- Vacuum gauge with isolation valves.
- Vacuum pump specifically for HFCs (using a standard vacuum pump is allowed if, and only if, it is fitted with a non-return valve on the suction side).
- Flaring tool, Pipe-cutter, Deburring tool, Spanners.
- Certified refrigerant leak detector (sensitivity 5g/year).

Using tools that have been in contact with HCFCs (R22 for example) or CFCs is prohibited.

The manufacturer declines any liability with regard to the warranty if the above instructions are not observed.

• Flared connections

Lubricating with mineral oil (for R12, R22) is prohibited.

- Lubricate only with alkylbenzene oil. If alkylbenzene oil is not available, fit without lubrication

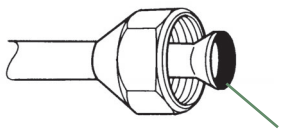

Coat the flared surface with **alkylbenzene oil.**
Do not use mineral oil.

• Brazing the refrigeration circuit (if necessary)

- Silver brazing (40% minimum recommended).
- Brazing only with dry nitrogen internal flux.

• Other remarks

- After each maintenance operation on the refrigeration circuit and before final connection, take care to put the caps back in position to avoid any pollution of the refrigeration circuit.
- To eliminate any filings getting into the pipes, use dry nitrogen to avoid introducing any humidity that may adversely affect the appliance's operation. In general, take every precaution to avoid humidity penetrating into the appliance.
- Proceed with the thermal insulation of the pipes / connections / refrigeration fittings in order to avoid any condensation. Use insulating sleeves resistant to temperatures above 90 ° C, at least 15mm thick if the humidity reaches 80% and at least 20mm if the humidity exceeds 80%. The thermal conductivity of the insulation is less than or equal to 0.040 W / mK. The insulation must be waterproof to resist the passage of steam during the defrost cycles. **Glass wool is prohibited**.

Shaping the refrigeration pipes

Bending

The refrigeration pipes must be shaped only on a bending machine or with a bending spring in order to avoid any risk of crushing or breaking them.

Remove the insulation material from the section of pipe to be bent.

Do not bend copper to an angle greater than 90°.

The radius of curvature must be more than 2.5x ø pipe.

Never bend pipes more than 3 times in the same place otherwise traces of fracturing may appear (hardening of the metal).

Creating the flarings

- Cut the pipe to an appropriate length with a pipe-cutter without damaging it.
- Carefully deburr it, holding the pipe pointing downward to avoid introducing filings into the pipe.
- Remove the flared connection nut situated on the valve to be connected and slide the pipe into the nut.
- Proceed to flare it, letting the pipe protrude out of the flaring tool's tube.
- After flaring, check the state of the working radius (**L**). This must not present any scratches or signs of fracturing. Also check the dimension (**B**).

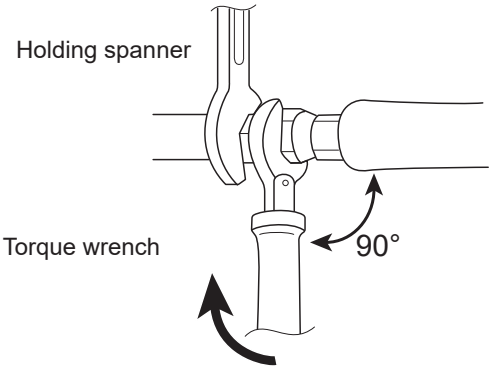

Designation	Tightening torque
Flared nut 6.35 mm (1/4")	16 to 18 Nm
Flared nut 9.52 mm (3/8")	32 to 42 Nm
Flared nut 12.7 mm (1/2")	49 to 61 Nm
Flared nut 15.88 mm (5/8")	63 to 75 Nm
Plug (A) 3/8", 1/4"	20 to 25 Nm
Plug (A) 1/2"	28 to 32 Nm
Plug (A) 5/8"	30 to 35 Nm
Plug (B) 3/8", 5/8", 1/2", 1/4"	12.5 to 16 Nm

Plug (A) & (B) : see *fig. 22, page 25.*

fig. 30 - Tightening torques

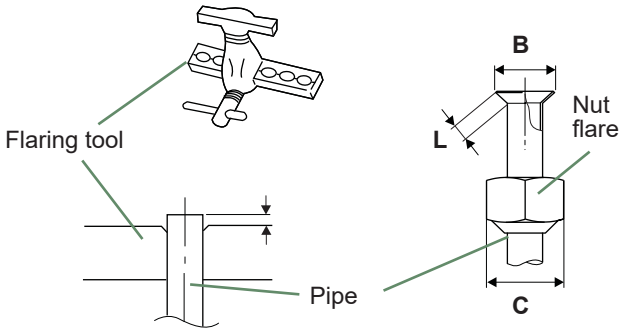

ø Pipe	Dimensions in mm		
	L	B 0/-0.4	C
6.35 (1/4")	1.8 to 2	9.1	17
9.52 (3/8")	2.5 to 2.7	13.2	22
12.7 (1/2")	2.6 to 2.9	16.6	26
15.88 (5/8")	2.9 to 3.1	19.7	29

fig. 29 - Flaring of the flare connections

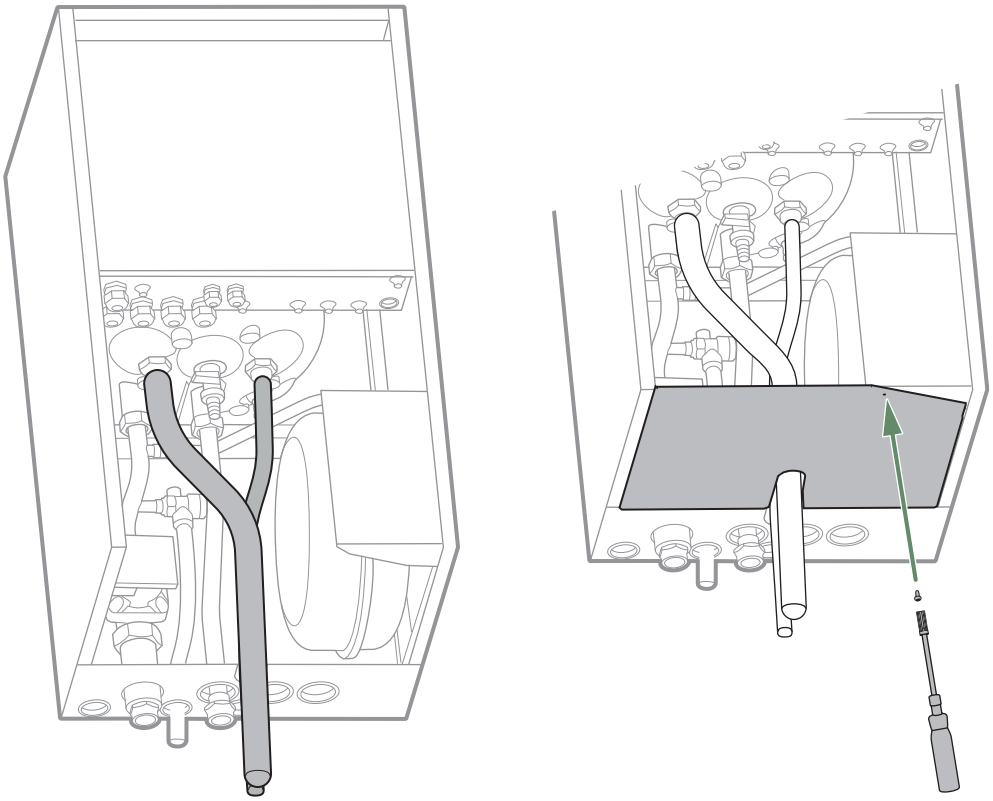

fig. 31 - Feeding through flared connections

HP model		Model 5, 6		Model 8		Model 10	
		gas	liquid	gas	liquid	gas	liquid
Outdoor unit connections		1/2"	1/4"	1/2"	1/4"	5/8	3/8
Refrigeration connections	Diameter	(D1) 1/2"	(D2) 1/4"	(D1) 1/2"	(D2) 1/4"	(D1) 5/8	(D2) 3/8
	Minimum length (L)	3m		3m		3 m	
	Maximum length* (L)	15m		15m		20 m	
	Maximum length** (L)	30m		30m		30 m	
	Maximum Height Difference** (D)	20m		20m		20 m	
Male-female adapter (reduction)		(R1) 1/2" - 5/8"	(R2) 1/4" - 3/8"	(R1) 1/2" - 5/8"	(R2) 1/4" - 3/8"	-	-
Hydraulic unit connections		5/8"	3/8"	5/8"	3/8"	5/8"	3/8"

* : Without additional charge.
** : Including any additional filling (see *"Additional filling", page 32*).

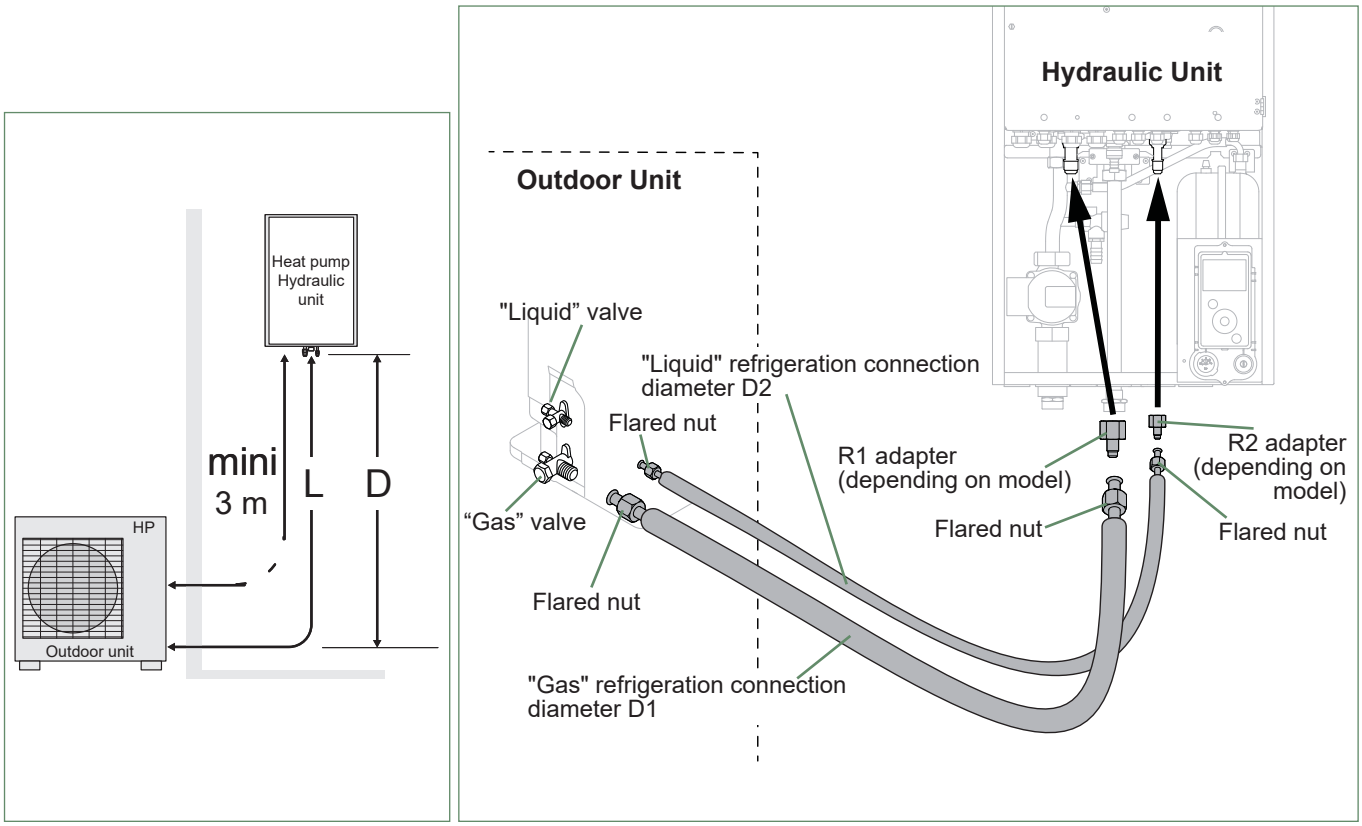

fig. 32 - Refrigeration connections (authorised diameters and lengths)

▶ Checks and connection

The refrigeration circuit is very sensitive to dust and humidity: check that the area around the connection is clean and dry before removing the plugs protecting the refrigeration connectors.

Indicated blowing value: 6 bar for minimum 30 seconds for connection of 20 m.

Checking the gas connection (large diameter)

(1) Connect the gas connection to the outdoor unit. Blow dry nitrogen into the gas connection and inspect its end::

- If water or impurities emerge, use a brand new refrigeration connection.

(2) Otherwise, proceed with flaring and connect the refrigeration connection to the outdoor unit immediately.

Checking the liquid connection (small diameter)

(3) Connect the liquid connection to the hydraulic unit. Blow nitrogen into the **gas-condenser-liquid connection** system and inspect its end (outdoor unit side).

- If water or impurities emerge, use a brand new refrigeration connection.
- Otherwise, proceed with flaring and connect the refrigeration connection to the outdoor unit immediately.

Take particular care to position the tube opposite its connector so as not to risk damaging the threads. A properly aligned connector can be attached easily by hand without much force being required.

- Where necessary, connect an adapter (reducer) 1/4"- 3/8" or 1/2"- 5/8" (see *fig. 30, page 29*)
- Comply with the indicated tightening torques. (fig. 30, page 29). If it is too tight, the fitting may break after a long period of time and cause a refrigerant leak.

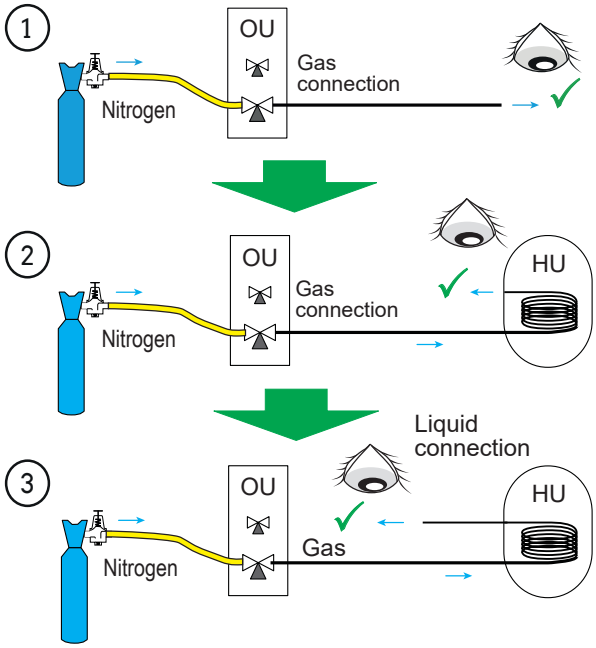

fig. 33 - Checking refrigeration connections

▶ Filling with gas

(see appendices *"Filling the installation with gas", page 74*)

Indicate on the label present on the outdoor unit, the amount of gas (Factory + additional filling) see *fig. 34*.

If additional filling is required, do it before filling the hydraulic unit with gas. Refer to paragraph *"Additional filling", page 32.*

- Remove the access plugs (**A**) (fig. 52, page 75) from the valve controls.
- First of all fully open the liquid valve (small) and then the gas valve (large) using an Allen (hex) key (anti-clockwise direction) without using excessive force against the stop.
- Quickly disconnect the hose from the *Manifold*.
- Refit the 2 original caps (be sure they are clean) and tighten them to the recommended tightening torque indicated in the table fig. 30, page 29. A seal is achieved in the caps only with metal to metal.

The outdoor unit does not contain any additional refrigerant allowing the installation to be bled.

Bleeding by flushing is strictly forbidden.

▼ Final sealing test

The sealing test must be carried out with a certified gas detector (sensitivity of 5g/year).

Once the refrigeration circuit has been gassed as described above, check that all the refrigeration connectors are gas-tight (4 connectors). If the flarings have been made correctly, there should be no leaks. If necessary, check the seal of the refrigeration valve caps.

If the event of a leak

- Return the gas to the outdoor unit (pump down). The pressure should not drop below atmospheric pressure (0 relative bar read on the *Manifold*) so as not to contaminate the recovered gas with air or moisture.
- Redo the connection,
- Restart the commissioning procedure.

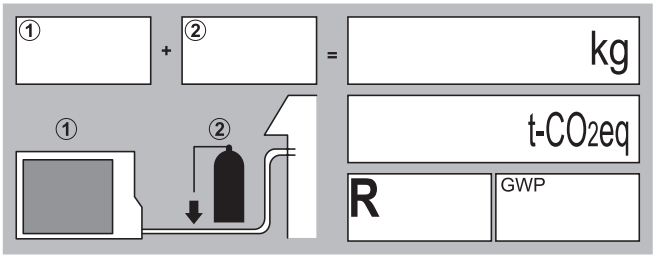

fig. 34 - Additional filling label

▼ Additional filling

The amount needed to fill the outdoor units corresponds to the maximum distances between the outdoor unit and the hydraulic unit as defined here page 30. If the distances are greater, an additional amount of R32 is required. For each type of appliance, this additional amount depends on the distance between the outdoor unit and the hydraulic unit. Any additional filling with R32 must be carried out by an approved specialist.

Model 5, 6, 8 *(Outdoor unit WOYA060KLT, WOYA080KLT*						
15m < Length of the connections ≤ 30m						
(Length of the connections - 15m) x 25 g/m= g						
Model / Factory fill	Length of the connections in m	16	17	X	29	30
Model 5, 6 / 970 g	Fill amount in g	995	1020	970 + (X - 15) x 25 = g	1320	1345
Model 8 / 1020 g		1045	1070	1020 + (X - 15) x 25 = g	1370	1395

Model 10 (*Outdoor unit WOYA100KLT*)						
20m < Length of the connections ≤ 30m						
(Length of the connections - 20m) x 20 g/m= g						
Model... / Factory fill	Length of the connections in m	21	22	X	29	30
Model 10 / 1630 g	Fill amount in g	1650	1670	1630 + (X - 20) x 20 = g	1810	1830

Filling must be carried out after creating a vacuum and before gassing the hydraulic unit, as follows:

- Disconnect the vacuum pump (yellow hose) and connect a bottle of R32 in its place **in the liquid extraction position**.
- Open the bottle's valve.
- Bleed the yellow hose by loosening it slightly on the *Manifold* side.
- Place the bottle on scales with a minimum accuracy of 10g. Note the weight.
- Carefully open the blue valve slightly and check the value shown on the scales.
- As soon as the value displayed has dropped by the value for the calculated additional fill amount, close the bottle and disconnect it.
- Quickly disconnect the hose connected to the appliance.
- Proceed to fill the hydraulic unit with gas.

Only use R32 !

Only use tools suitable for R32 (set of pressure gauges).

Always fill in the liquid phase.

Never exceed the maximum length or difference in level.

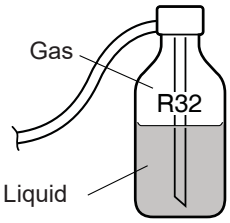

fig. 35 - Gas bottle R32

▼ Recovering the refrigerant in the outdoor unit

Before performing any maintenance, make sure that <u>all power supplies</u> have been cut off.

Stored energy: after cutting off the power supplies, <u>wait for 10 minute</u> before accessing the internal parts of the equipment.

Perform the following procedures to collect the refrigerant.

1- Switch the ON/OFF Switch to the 0 position (ref. **3**, fig. 9, page 13). Disconnect the outdoor unit's power supply.

2- Remove the front panel. Open the power control box. Then turn **ON** the **DIP SW1** on the interface board,

3- Reconnect the power supply. Switch the ON/OFF Switch to position 1. (The green and red LEDs start flashing; 1s on / 1s off). <u>The outdoor unit begins cooling operation about 3 minutes after being switched on</u>.

4- The circulation pump starts.

5- Close the liquid valve on the outdoor unit **maximum** 30 secs after the outdoor unit starts.

6- Close the gas valve on the outdoor unit when the pressure is below 0.02 relative bar read on the *Manifold*, or 1-2 minutes after the liquid valve has been closed, while the outdoor unit continues to operate.

7- Disconnect the power supply.

8- Recovery of the refrigerant is complete.

Notes :

- The pump down operation cannot be activated even if **DIP SW1** is set to **ON** while the heat pump is in operation.
- Do not forget to switch **DIP SW1** back to **OFF** after the pump down operation has been completed.
- Select the heating mode.
- If the pump down operation fails, try the operation again by turning the machine off and opening the "liquid" and "gas" valves. Then after 2-3 minutes, restart the pump down operation.

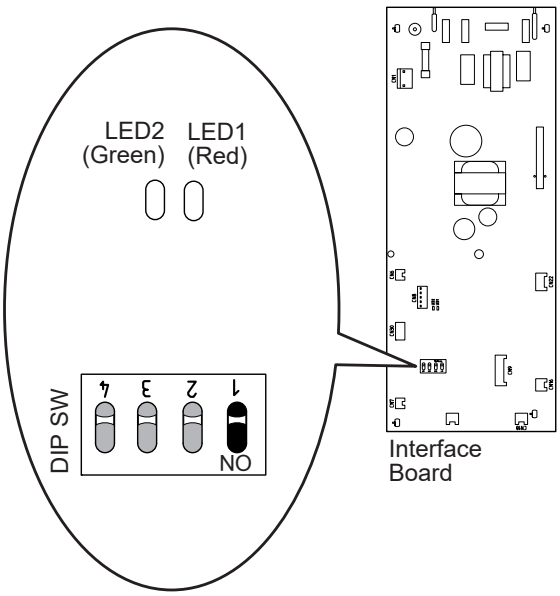

fig. 36 - Location of DIP switches and LEDs on the hydraulic unit interface board

Hydraulic connections

Voir *"Basic Hydraulic Layouts", page 76*

Heating circuit

Flushing the installation

Before connecting the hydraulic unit to the installation, **rinse out the heating system correctly** to eliminate any particles that may affect the appliance's correct operation.

Do not use solvents or aromatic hydrocarbons (petrol, paraffin, etc.).

Flush the installation several times before proceeding to the final filling.

In the case of an old installation, provide a sufficiently large decanting pot with a drain on the return from the heat pump and at the lowest point in the system in order to collect and remove any impurities.

In some installations, the presence of different metals can cause corrosion problems; the formation of metal particles and sludge can appear in the hydraulic circuit. In this case, it is advisable to use a corrosion inhibitor in the proportions indicated by the manufacturer. You must also ensure that treated water does not become corrosive (neutral pH: 7 <pH <9).

Flush the installation several times before proceeding to the final filling.

Connections

The heating circulation pump is built into the hydraulic unit.

Connect the central heating pipes to the hydraulic unit correctly according to the direction of circulation.

The pipe between the hydraulic unit and the heat collector must be at least one inch in diameter (26x34 mm).

Calculate the diameter of the pipes based on flow rates and lengths of the hydraulic systems.

Tightening torque: 15 to 35 Nm.

Use union connectors to make it easier to remove the hydraulic unit.

Try to use connection hoses to avoid transmitting noise and vibrations to the building.

Connect the drains from the drain valve and the safety valve to the main sewer system.

Verify that the expansion system is correctly connected. Check the expansion vessel pressure (pre-inflated to 1 bar) and the safety valve is calibrated.

The flow rate of the installation must be at least equal to the minimum value mentioned in the table *"General characteristics", page 7*. The installation of a regulator (other than those included in our configurations) which reduces or stops the flow through the hydraulic unit is prohibited.

▼ Volume of the heating system

You must maintain the minimum installation water volume. Install a buffer tank on the return from the heating circuit in case the volume is lower than this value. Where the system is fitted with one or more thermostatic valves, you must ensure that this minimum water volume is able to circulate.

	Min. volume in litres PER CIRCUIT (excl. HP)		
Heat pump	***Mandatory Fan-coil***	***Recommendation Radiators***	***Recommendation Heating-cooling floor***
Model 5	23	15	15
Model 6	23	15	15
Model 8	36	33	15
Model 10	49	44	22

▶ Filling and bleeding the installation

Check the pipe fixings, tightness of the connectors and the stability of the hydraulic unit.

Check the direction in which the water is circulating and that all the valves are open.

Proceed to fill the installation.

Do not operate the circulation pump during filling. Open all the drain valves in the installation and the bleeder valve on the hydraulic unit (**P**) to expel the air contained in the pipes.

Close the drain valves and add water until the pressure in the hydraulic circuit reaches 1 bar.

Check that the hydraulic circuit has been bled correctly.

Check there are no leaks.

After the *"⚙ Commissioning", page 48* stage, and once the machine has started, bleed the hydraulic unit again (2 litres of water).

Precise filling pressure is determined by the water pressure in the installation.

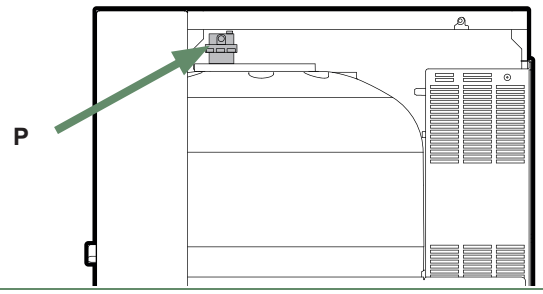

fig. 37 - Hydraulic unit automatic bleeder valve

Electrical connections

Before performing any maintenance, make sure that <u>all power supplies</u> have been cut off.

Electrical installation must be performed in accordance with current regulations.

The electrical diagram for the hydraulic unit is shown on fig. 55, page 80.

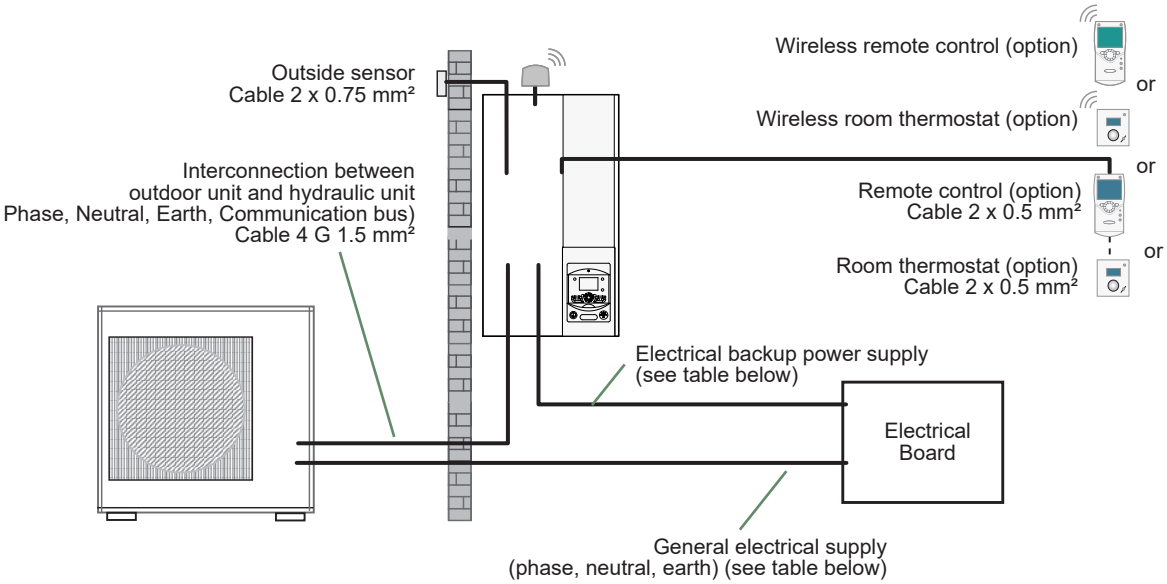

fig. 38 - Overall layout of electrical connections for a simple installation (1 heating circuit)

▶ Cable dimensions and protection rating

These cable dimensions are provided for information purposes only and do not exempt the installer from checking that these dimensions match requirements and comply with current standards.

■ Outdoor Unit Power Supply

Heat pump		*Electricity supply 230 V - 50 Hz*	
Model	***Max. power consumption***	***Connection cable **** *(phase, neutral, earth)*	***Circuit breaker C curve***
Model 5	3260 W	3 G 2.5 mm²	16 A
Model 6	3260 W		
Model 8	4510 W	3 G 2.5 mm²	20 A
Model 10	4760 W	3 G 4 mm² or 3 G 6 mm²	32A

■ Interconnection between outdoor unit and hydraulic unit

The hydraulic unit is powered by the outdoor unit by means of a 4 G 1.5 mm² cable* (phase, neutral, earth, communication bus).

■ DHW power supply (according option)

The DHW section is powered directly via a 3 G 1.5 mm² cable* (phase, neutral, earth).

Protection by rated circuit breaker (16 A - C curve).

■ Electrical backup power supply (according option)

The hydraulic unit contains a electrical backup circuit installed in the storage tank.

Heat pump	*Electrical backups*		*Electrical backup power supply*	
Model	***Power***	***Nominal current***	***Connection cable **** *(phase, neutral, earth)*	***Circuit breaker C curve***
Model 5, 6, 8 & 10	3 kW	13 A	3 G 1.5 mm²	16 A
Model 5, 6, 8 & 10 with 6 kW Backup Relay Kit	2 x 3 kW	26.1 A	3 G 6 mm²	32 A

* Cable type 60245 IEC 57 or 60245 IEC 88.

▶ Outdoor unit

Access to connection terminals:

- **Model 5, 6 & 8**

- Remove the cowl.

- **Model 10**

- Remove the front panel.

Avoid contact between cables and refrigeration valves / connections.

Use cable clamps to prevent any power cables from being disconnected accidentally.

Fill in the space where the cables enter the outdoor unit with the insulating plate.

■ **Models 5, 6 and 8**

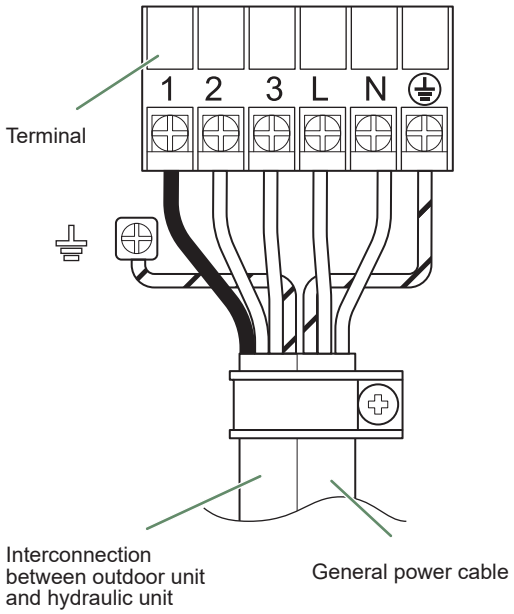

■ **Models 5, 6 and 8**

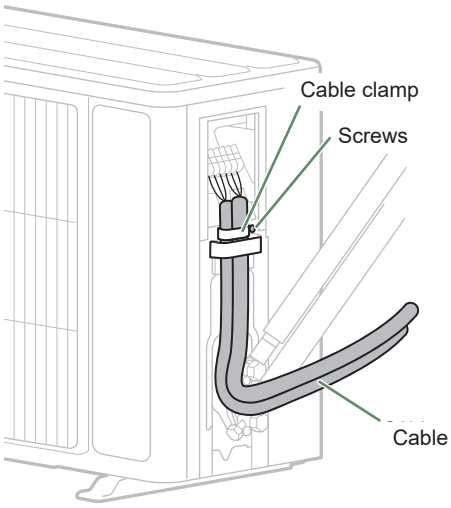

■ **Model 10**

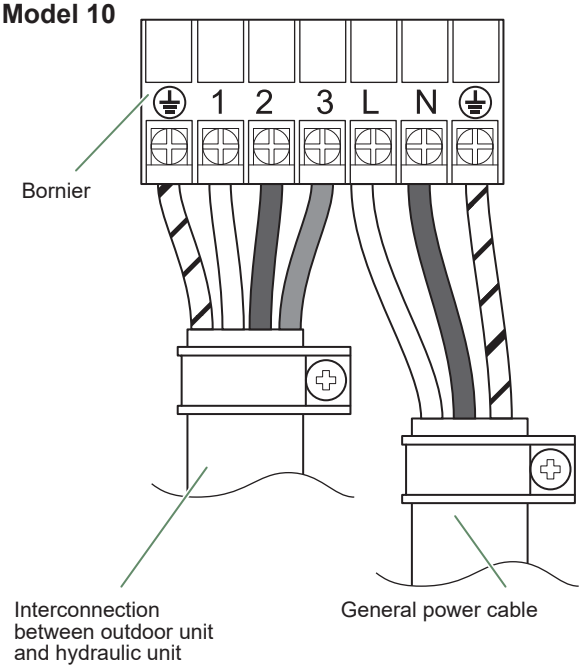

■ **Model 10**

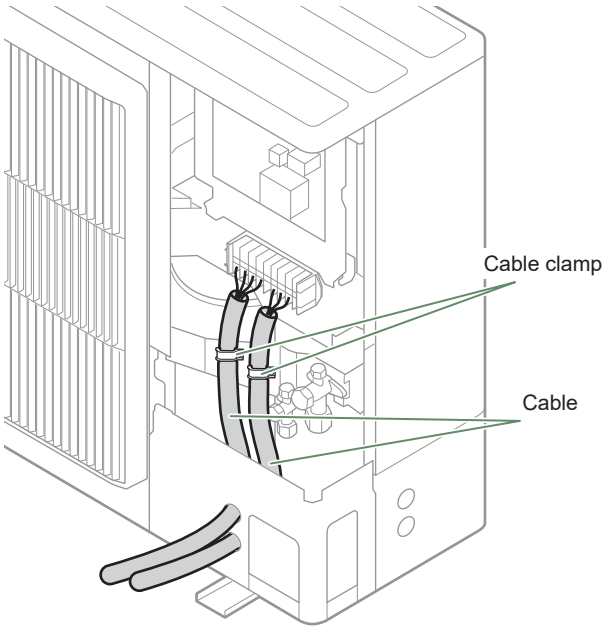

fig. 39 - Connections to outdoor unit's terminal block

fig. 40 - Access to outdoor unit's terminal block

▶ Hydraulic unit

Access to connection terminals :

- Remove the front plate.
- Open the power control box.
- Make the connections according to the diagram (fig. 43, page 41).

Do not place the sensor and power supply lines parallel to each other to avoid interference due to voltage spikes in the power supply.

Make sure that all electrical cables are housed in the areas provided for this purpose.

▼ Interconnection between outdoor unit and hydraulic unit

Match up the terminal block markers on the hydraulic unit to those of the outdoor unit exactly when connecting the interconnection cables.

An incorrect connection could result in the destruction of one or other of the units.

▼ Electrical backup

If the heat pump is not installed with a boiler connection:

- Connect the power supply for the backup to the electrical panel.

▼ Boiler connection (option)

If the boiler connection option is used, the electric backup must not be connected.

- Please refer to the instructions supplied with the boiler connection kit.
- Please refer to the instructions supplied with the boiler.

▼ Second heating circuit (option)

- Refer to the instructions supplied with the second hydraulic circuit kit.

▼ DHW tank with electrical backup heating (option)

If the installation is fitted with a DHW tank with electrical backup heating:

- Please refer to the instructions supplied with the DHW kit.
- Please refer to the instructions supplied with the DHW tank.

▼ Contract with Energy Supplier

The heat pump can be set to operate within particular types of energy contract, e.g. off-peak, PV (Photovoltaic). In particular, domestic hot water (DHW) at the comfort temperature will be produced at off-peak times when electricity is at its cheapest.

- Connect the "Power Provider" contact to input EX2 (*fig. 44, page 41*).
- Set the DHW configuration to "Off-Peak".

• 230V on input EX2 = "Peak Hours" information activated. (Base setting / Line modification possible 5983, Configuration menu).

▼ Power limitation or EDR (Energy Demand Reduction)

Power limitation is designed to reduce electricity consumption when it is too high for the contract signed with the energy supplier.

- Connect the power limiter device to input EX1 (*fig. 44, page 41*). Heat pump and DHW backups will be shut off in the event of over-consumption by the dwelling.

• 230 V on input EX1 = power limitation in progress (Base setting / Line modification possible 5981, Configuration menu) (Operating line 2920).

During the power limitation or EDR, the outdoor unit errors are not displayed on the hydraulic unit.

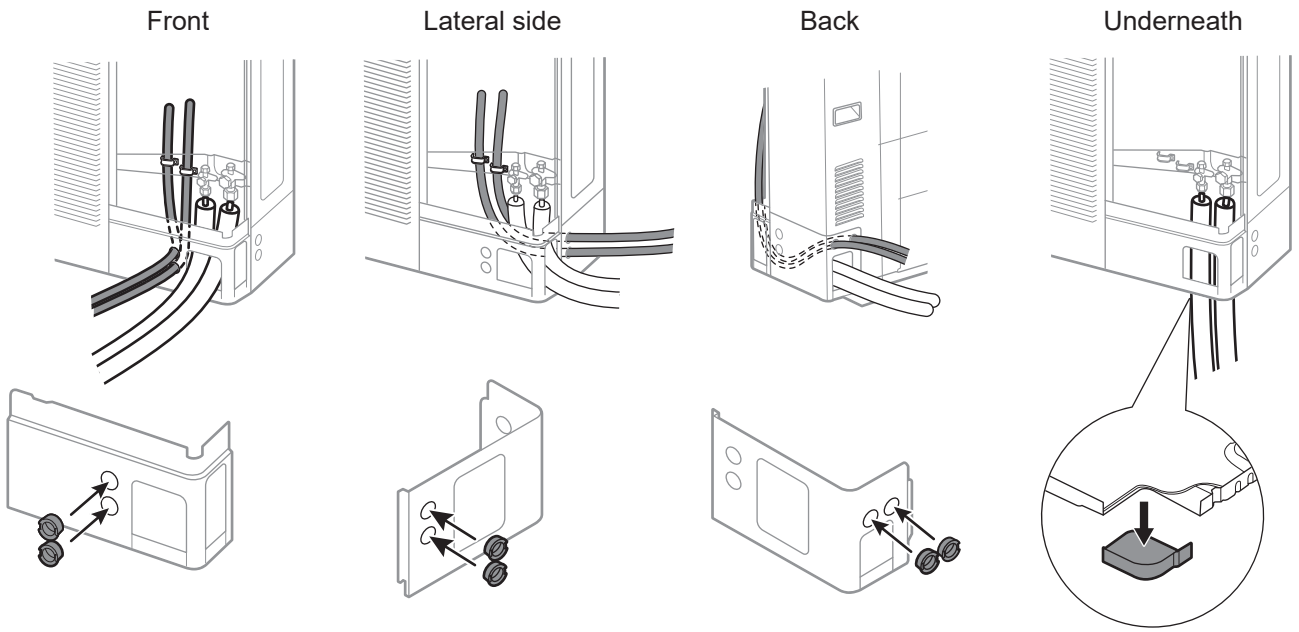

fig. 41 - Location of electrical cables and refrigeration connections to outdoor unit (Model 10)

▼ Faults external to the heat pump

Any component which reports back information (Underfloor heating safety switch, thermostat, pressure switch, etc.) may signal an external problem and stop the heat pump.

- Connect the external component to input EX3 (*fig. 44, page 41*).

• 230 V on input EX3 = heat pump stopped (system displays Error 369).

▶ Outside sensor

The outside sensor is required for correct operation of the heat pump.

Please see the fitting instructions on the sensor's packaging.

Place the sensor on the coldest side of the building, generally the northern or north-western side.

It must not be exposed to morning sun.

It must be installed so as to be easily accessible but at least 2.5m from the ground.

It is essential that it is not placed near any sources of heat such as flues, upper parts of doors and windows, near extractor vents, under balconies and eaves, or anywhere which would insulate the sensor from variations in the outdoor air temperature.

- Connect the outside sensor to connector **X84** (*fig. 44*) (terminals **M** and **B9**) on the heat pump control board.

▶ Room sensor (option)

The room sensor is optional.

Please see the fitting instructions on the sensor's packaging.

The sensor must be installed in the living room area on an unobstructed wall. It must be installed so as to be easily accessible.

Avoid direct sources of heat (chimney, television, cooking surfaces, sun) and draughty areas (ventilation, door, etc.).

Draughts in buildings are often brought about by cold air blowing through the electrical ducting. Lag the electrical ducts if there is a cold draught behind the room sensor.

▼ Installing a room sensor

■ **Room thermostat T55** (*fig. 44*)

- Connect the sensor to the **X86** connector of the heat pump's regulator board using the connector provided (terminals **1**, **2**).

■ **Room thermostat radio T58** (*fig. 44*)

- Please refer to the instructions.

▼ Installing a room control unit

■ **Room control unit T75** (*fig. 44*)

- Connect the sensor to the **X86** connector of the heat pump's regulator board using the connector provided (terminals **1**, **2** and **3**).

■ **Room control unit radio T78** (*fig. 44*)

- Please refer to the instructions.

▼ Fan convector zone

If the installation is equipped with fan convectors or dynamic radiators, **do not use a room sensor.**

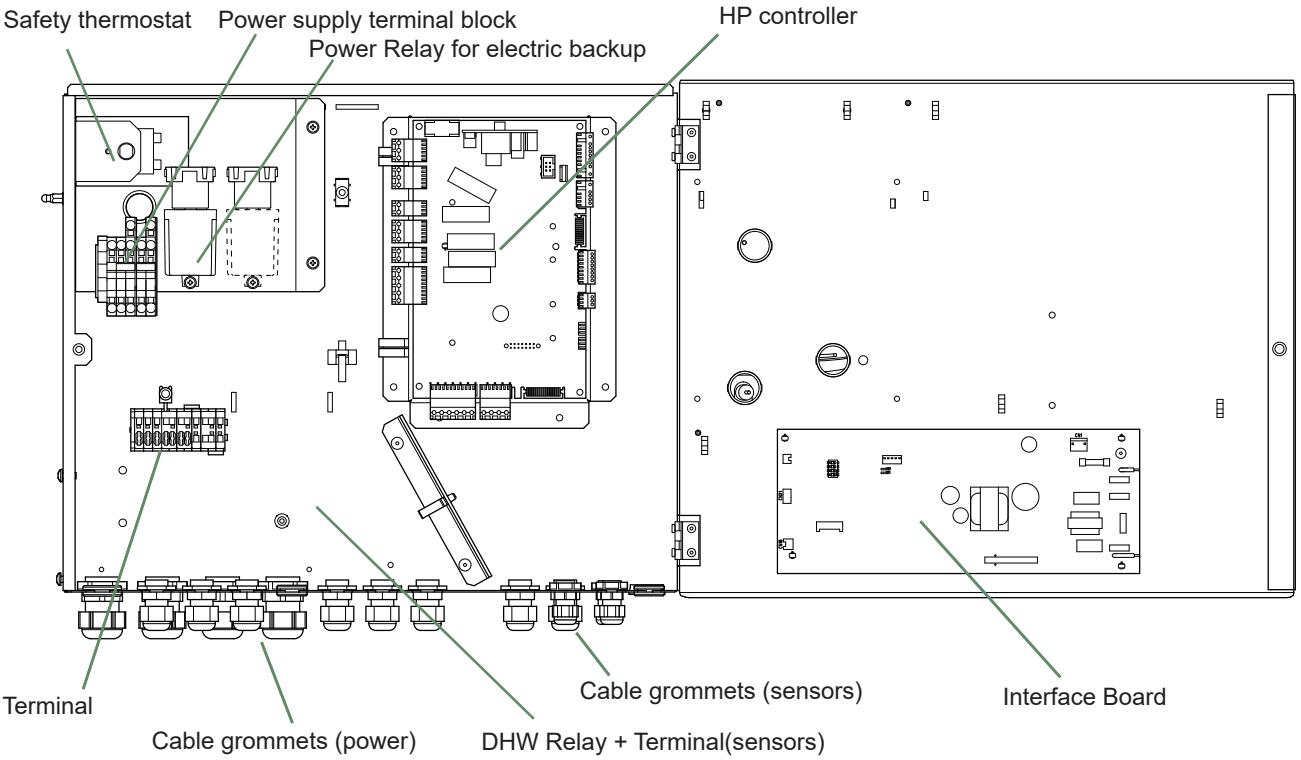

fig. 42 - Description of the hydraulic unit's electrical control box

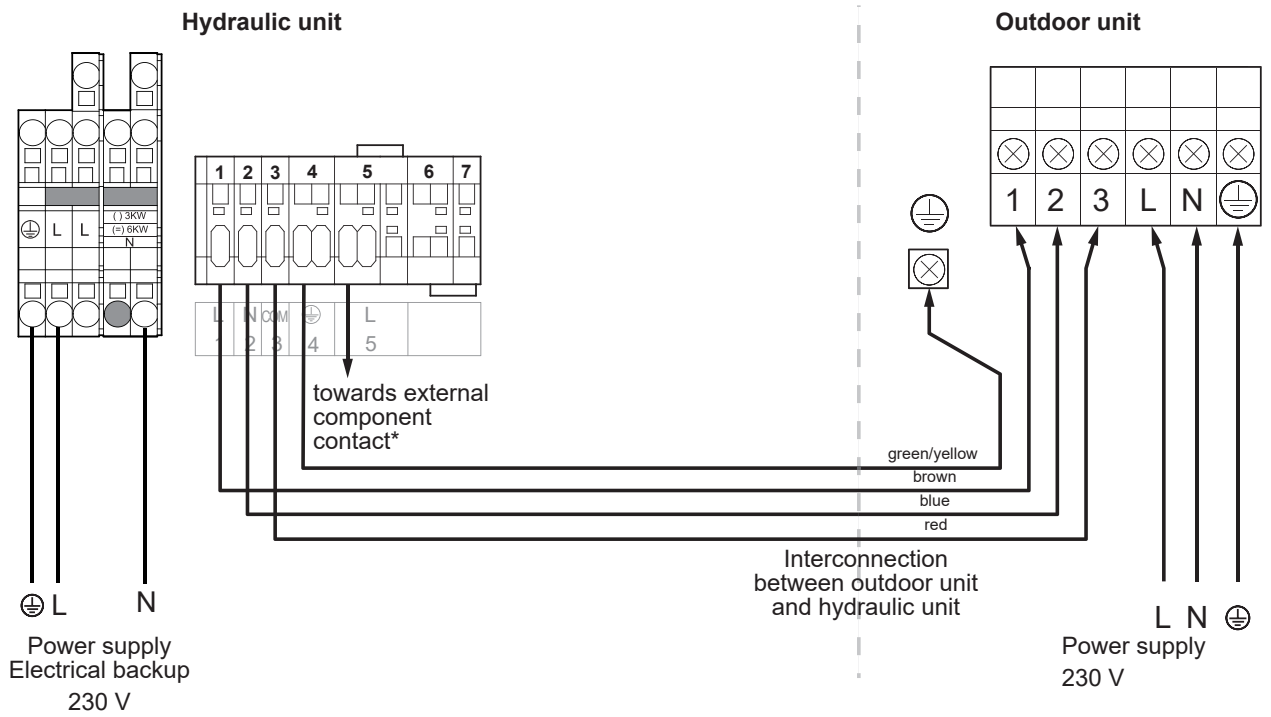

fig. 43 - Connection to terminal blocks and power relay

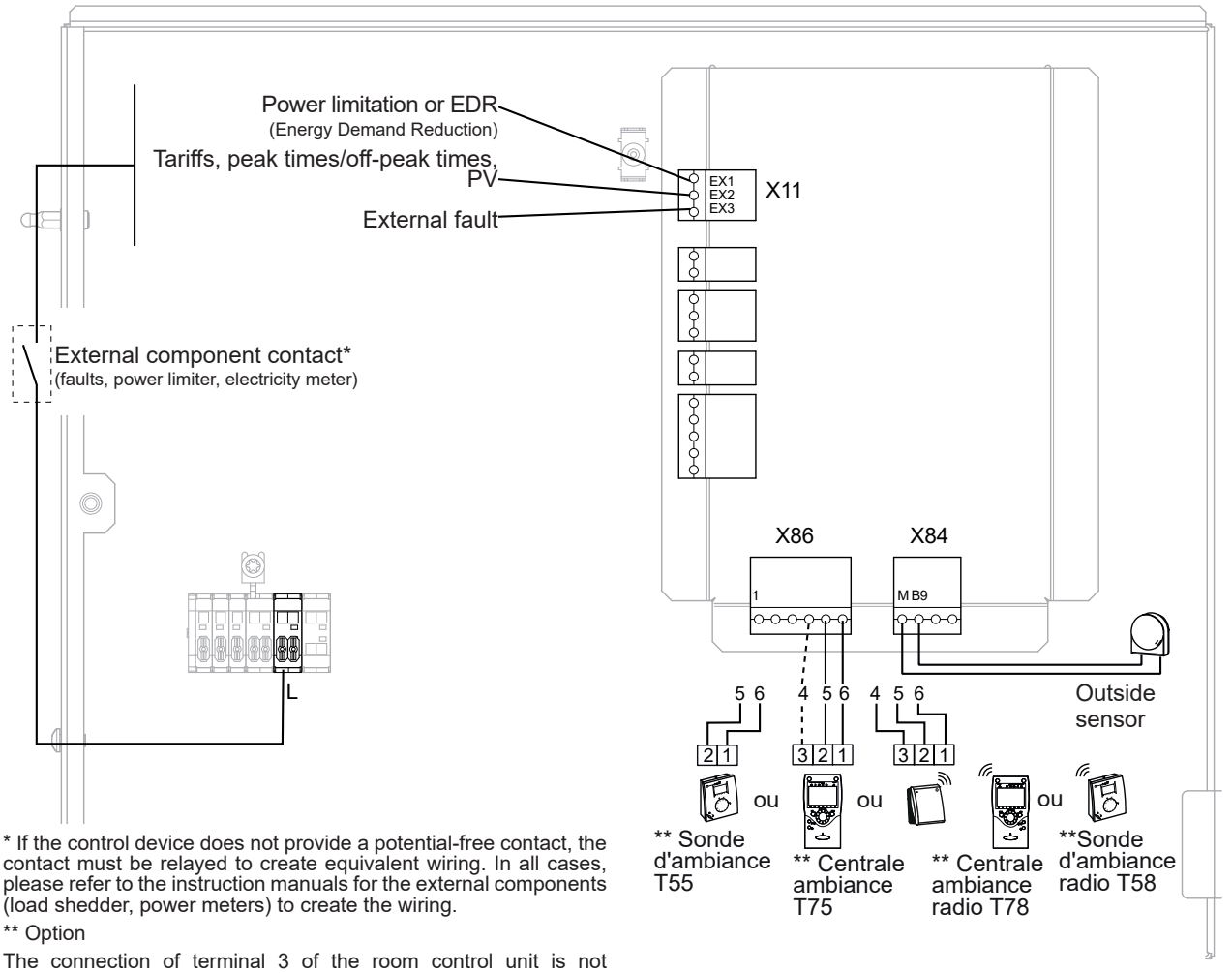

* If the control device does not provide a potential-free contact, the contact must be relayed to create equivalent wiring. In all cases, please refer to the instruction manuals for the external components (load shedder, power meters) to create the wiring.

** Option

The connection of terminal 3 of the room control unit is not mandatory (lighting of the room control unit).

fig. 44 - Connections on the heat pump controller (accessories and options)

Controller Interface

▶ User interface, central ambient unit (option) and ambient sensor (option)

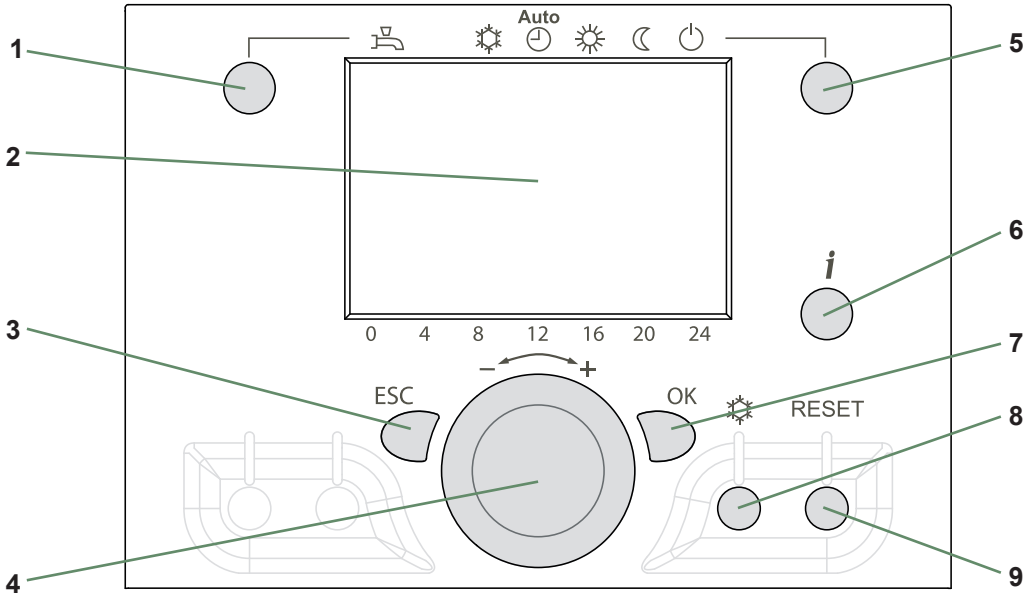

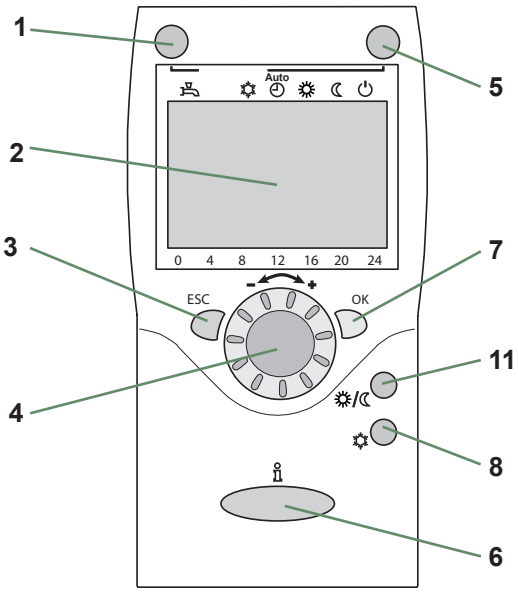

Central ambient unit (option)

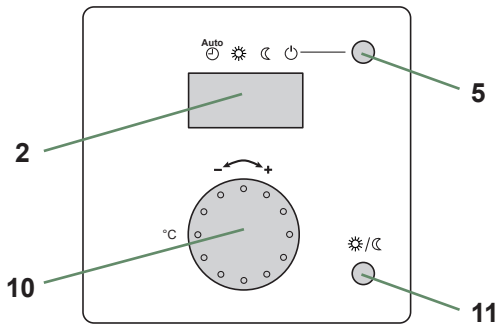

Ambient sensor (option)

Ref.	*Functions*	*- Definition of the functions*
1	**Selecting the DHW operation *** ON OFF	- **Start**: Production of DHW in function of the timer programme. - **Stop**: Production of the DHW stopped with antifreeze function of the domestic water active. - **Manual start button**: Press the DHW button for 3 s (switches from "reduced" to "comfort" until the DHW timer programme is switched again).
2	**Digital display**	- Check the operation, read the current temperature of the heating operation, or a possible fault. - View the settings.
3	**"ESC" output**	- Exit the menu.
4	**Navigation and setting**	- Setting the comfort temperature value. - Menu selection - Setting the parameters.
5	**Selecting the heating operation**	- Auto Service heating according to the heating programme (automatic summer/winter switching). - Permanent comfort temperature. - Permanent reduced temperature. - "Stand-by" operation with antifreeze protection (provided that the electrical power supply of the heat pump is not interrupted).
6	**Displaying information**	- Miscellaneous information (see *"Information display", page 66*). - Reading the error codes (see page 68). - Information on maintenance, special operation.
7	**Validation "OK"**	- Enter the selected menu. - Validate the parameter settings. - Validate the comfort temperature value setting.
8	**Selection of the Cooling mode***	- Service cooling according to the heating programme (automatic summer/winter switching).
9	**Reset (Press and relief)**	- Reset the parameters and cancel the error messages. **Do not use during normal operation**
10	**Setting button**	- Setting the comfort temperature value.
11	**Presence button**	- Comfort / reduced switching.

* according option

Description of the display

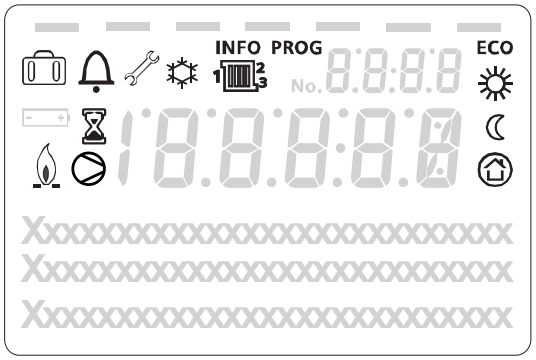

fig. 45 - User interface display

Icons	Definitions
	- Heating mode active with reference to the heating circuit.
	- Heating in comfort mode.
	- Heating in reduced mode.
	- Heating in "standby" mode (antifreeze).
	- Cooling mode active *.
	- Holiday function activated.
	- Process in progress.
	- Compressor operation.
	- Burner operation *.
	- Default message.
	- Maintenance, special operation
INFO	- Information level activated.
PROG	- Programming activated.
ECO	- ECO function activated (Heating stopped temporarily)
18:28 20.5°C temperature ambiante	- Time / Parameter number / Setpoint value.
20.5°C temperature ambiante	- Ambient temperature / Setpoint value.
20.5°C temperature ambiante	- Setpoint information / Parameter information.

* according option

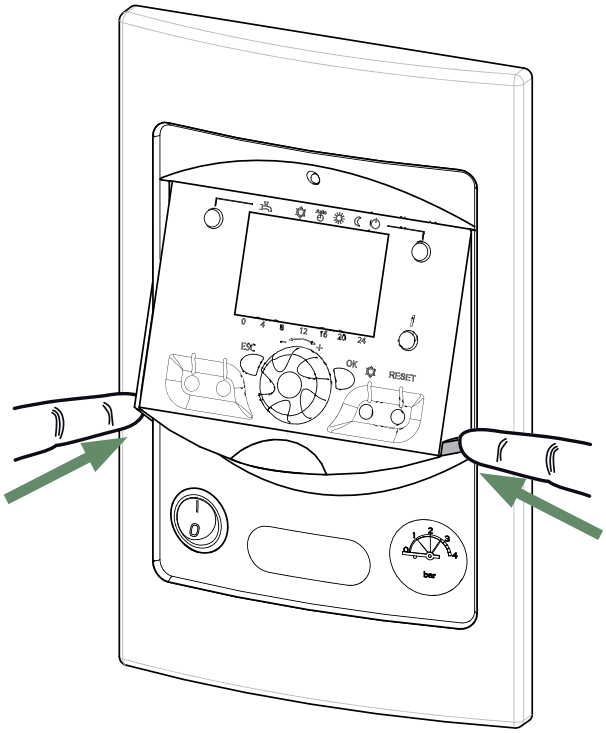

fig. 46 - Closing the display

Temperature control

The heat pump's operation is subject to the temperature control.

The heating circuit water temperature setpoint is adjusted according to the outdoor temperature.

If there are thermostatic valves on the installation, these must be fully open or set higher than the normal temperature setpoint.

Setting

During the installation, the temperature control must be configured to suit the radiators and level of insulation of the dwelling.

The temperature control graphs (fig. 48, page 47) refer to a room temperature setpoint of 20°C.

The temperature control's gradient determines the impact of variations in the outdoor temperature on variations in the heating flow temperature.

The steeper the gradient, the more likely a slight reduction in the outdoor temperature will cause a significant increase in the water flow temperature in the heating circuit.

The temperature control off-set modifies the flow temperature of all graphs, without modifying the gradient (fig. 49, page 47) .

Corrective actions to take in the case of discomfort are listed in the table (fig. 47, page 47).

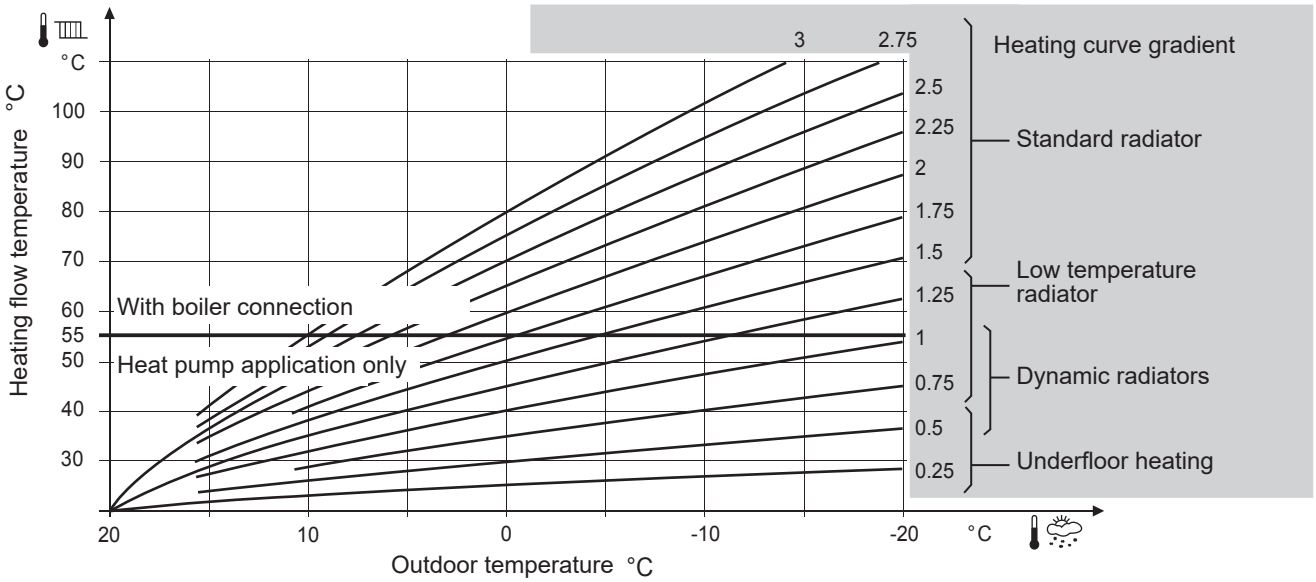

fig. 48 - Heating curve gradient (line 720)

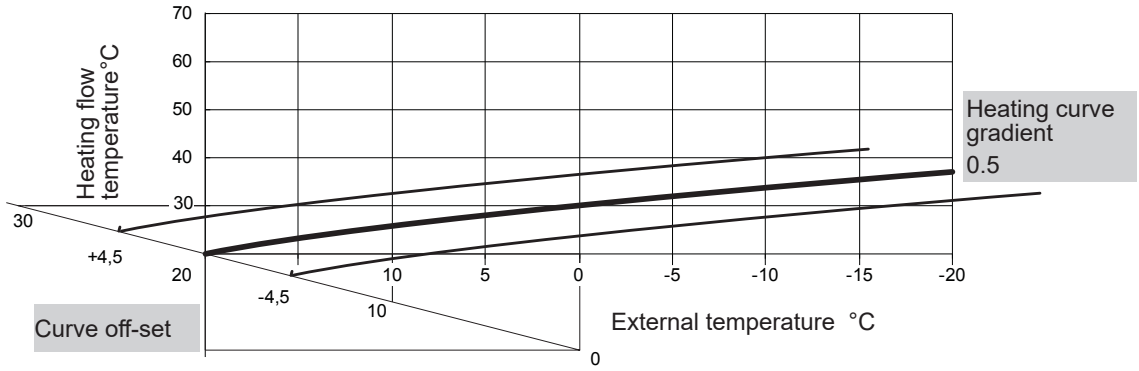

fig. 49 - Transferral of the heating curve (line 721)

Sensations...					→	Corrective actions on the temperature control:	
...in mild weather			...in cold weather			Gradient (line 720)	Off-set (line 721)
	Good	&		Good	→	No correction	No correction
	Cold	&		Hot	→	−	+
	Cold	&		Good	→	−	+
	Cold	&		Cold	→	No correction	+
	Good	&		Hot	→	−	No correction
	Good	&		Cold	→	+	No correction
	Hot	&		Hot	→	No correction	−
	Hot	&		Good	→	+	−
	Hot	&		Cold	→	+	−

fig. 47 - Corrective actions in case of discomfort

Commissioning

- Close the installation's main circuit breaker.

  Upon initial start-up (or in winter), to preheat the compressor, engage the installation's main circuit breaker (outdoor unit power supply) several hours before starting any tests.

- Press the heat pump's ON/OFF Switch.

  To ensure that inputs EX1, EX2 and EX3 operate correctly: Check that the electricity supply's neutral phase polarity has been respected.

When the power is switched on and every time that the ON/OFF Switch is switched off and then switched on again, the outdoor unit will take approximately 4 minutes to start up, even if the setting is requesting heating.

The display can show error 370 when the appliance (re)starts. Do not be concerned, the communication between the outdoor and hydraulic unit will re-establish itself in a few moments.

During the regulator initialisation phase, the display shows all the symbols and then "Data, update" and then "State heat pump".

- Make all the specific adjustments to the setting. (Installation configuration):

- Press OK .

- Hold down the key i for 3s and select the level of access used with the aid of the knob. .

- Confirm with the key OK .
- Parameter the heat pump's setting (Consult *"List of function lines", page 51*).

On commissioning (or the case of error 10), the electrical back-up heaters are liable to start up even if the outdoor temperature at the time is above the heaters' trigger temperature.

The regulating system uses an average initial outdoor temperature of 0°C and requires some time to update this temperature.

To avoid this situation, the sensor must be connected correctly. Re-initialise parameter 8703 (commissioning level, consumer diagnostic menu).

▶ PWM pump speed

The speed of the PWM circulator can be adjusted by adjusting the following parameters from 70 to 100% :

Presets (5700)	*1*	*2*	*3*	*4*
Parameter Heating speed	2793	2154	2154	2154
Parameter Cooling speed	2779	2127	2127	2127

Presets (parameter 5700) :

Preset 1: 1 heating circuit.
Preset 2: 2 heating circuits.
Preset 3: Boiler backup, 1 heating circuit.
Preset 4: Boiler backup, 2 heating circuits.

■ **Models 5, 6 and 8**

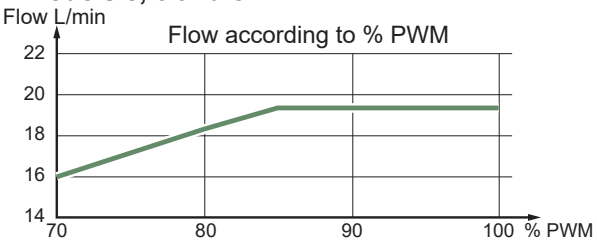

■ **Model 10**

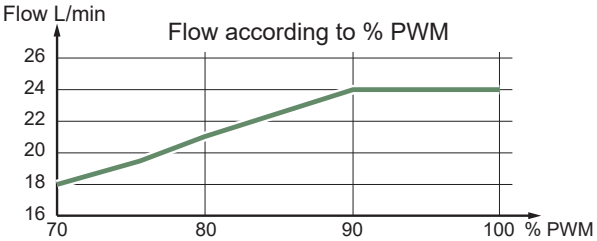

▶ Silent mode

It's possible to reduce the noise emitted by the outdoor unit by reducing the operating power of the compressor.

Silent mode setting

Adjust parameter **2907** to **50%.** The compressor power will be halved from **22:00** to **7:00** (parameters **3026** and **3027** / default values).

To guarantee the heat pump performance, the function is deactivated if the outdoor temperature is below 7 ° C.

▶ Configuring room thermostat (wireless)(option)

To configure the room thermostat and connect it to the appropriate heating zone:

- Hold down the presence key for more than 3 seconds. The room thermostat displays RU and a number flashes.
- Turn the wheel to choose the zone (1, 2).

If the installation is fitted with 2 room thermostats,

- **First connect one room thermostat and configure it in zone 2,**
- **Then connect the other room thermostat and configure it as default in zone 1.**

- Hold down the presence key; the room thermostat displays "P1" and a flashing number. 1: Automatic recording: a correction of the setting with the button is adopted without any particular confirmation (timeout) or by pressing the mode key. 2: Recording with confirmation: a correction of the setting with the button is not adopted until the mode key is pressed.
- Press the presence key again; the room thermostat displays "P2" and a flashing number.

0: OFF: all the operating elements are engaged.

1: ON: the following operating elements are locked:

- Switching over the heating circuit's operating mode,
- Adjusting the comfort setting,
- Changing the operating level.

The room thermostat displays OFF for 3 seconds when a locked button is pressed.

▶ Configuring room control unit (wireless) (option)

During commissioning, after an initialisation period of approx. 3 minutes, the user's language must be set:

- Press OK.
- Choose menu "Operator section".
- Choose language.
- Select the language (**English**, Deutsch, Français, Italiano, Nederlands, Español, Português, Dansk…).

In the case of 2 heating circuits,

- Choose the allocation of the room control unit (room appliance 1 or 2…) line 40* (see page 51).
- According to the allocation selected check and, if necessary, modify the settings for lines 42*, 44*, 48* (see page 51).

Line		*Function*	*Setting range or display*	*Setting increment*	*Basic setting*
40	***I***	Use as...	Room appliance 1, 2, P, User interface 1, 2, P, Service appliance		***Room appliance 1***
		This line regulates the use of the room control unit. Depending on how it is used, other settings will be necessary (lines 42, 44, 48).			
42	***I***	Appliance allocation 1	Heating circuit 1, Heating circuit 1 & 2, Heating circuit 1 & P, All the heating circuits		***Heating circuit 1***
44	***I***	Operation HC2 (command HC2)	Commonly with HC1, Independent		***Commonly with HC1***
		This function enables you to choose whether you wish the room thermostat (as an option) to act on both zones or just a single zone.			
48	***I***	Occupancy control switch function	Without, Heating circuit 1, Heating circuit 2, Common		

* These parameter lines are only accessible from the room control unit.

Controller Menu

General

Only the parameters accessible at the levels:

U - end user.

I - Commissioning

S - Engineering.

are described in this document.

The access levels are specified in the second column of the table by means of the letters **U**, **I** and **S**.

The OEM parameters are not described and require a manufacturer access code.

Setting parameters

- Selecting the desired level.
- Scroll the list of menus.
- Selecting the desired menu.
- Scroll the function lines.
- Selecting the desired line.
- Adjusting the parameter.
- Validate the setting by pressing **OK**.
- To return to the menu, press **ESC**.

If no setting is made for 8 minutes, the screen automatically returns to the basic display.

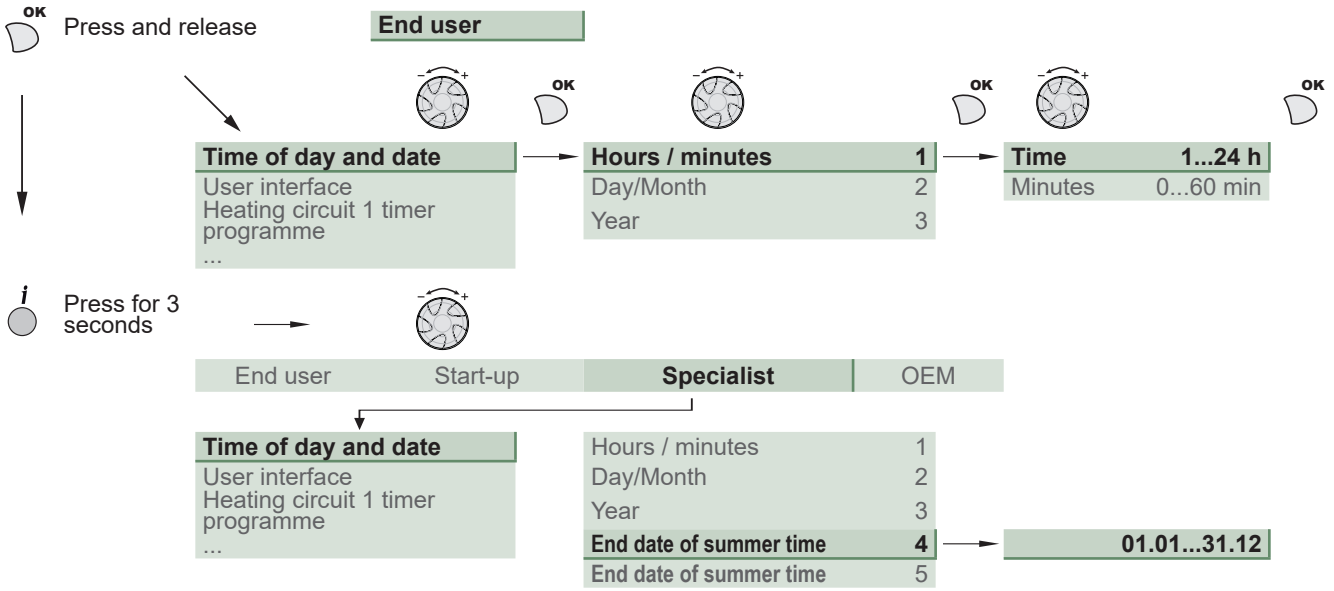

Recommended settings for the parameters depending on the installation's emitters

		Very Low Temperature Radiators / Heating-cooling floor	Low temperature radiators	Dynamic radiators or fan-coil heaters	Classic temperature radiators
Heating curve slope	**720** (CC1)	0.25 to 0.5	0.5 to 1.25	0.4 to 1.1	1.25 to 3
	1020 (CC2)				
Curve displacement	**721** (CC1)	0	0	4	0
	1021 (CC2)				
Flow temp setpoint Min	**740** (CC1)	Factory (17°C)	Factory (17°C)	30 or 35°C	Factory (17°C)
	1040 (CC2)				
Flow temp setpoint Max	**741** (CC1)	50°C	Factory (60°C)	65°C	65°C
	1041 (CC2)				
DHW charging time limitation	**5030**	Factory (90 min)	Factory (90 min)	40 min	Factory (90 min)

List of function lines

Line		Function	Setting range or display	Setting increment	Basic setting
Time of day and date					
1	***U***	Hours / Minutes	00:00... 23:59	1	***--:--***
2	***U***	Day / Month	01.01... 31.12	1	***--.--***
3	***U***	Year	1900... 2099	1	***----***
5	***S***	Start of Summer time (Day / Month)	01.01... 31.12	1	***25.03***
6	***S***	End of Summer time (Day / Month)	01.01... 31.12	1	***25.10***
		The change of hour will appear at 3:00 first Sunday after the regulated date.			
Operator Section					
20	***U***	Language	English, Français, Italiano, Nederlands...		***English***
22	***S***	Info	Temporary, Permanent		***Temporary***
26	***S***	Operation locking	On, Off		***Off***
27	***S***	Programming locking	Off, On		***Off***
28	***I***	Direct setting	Automatic storage, With confirmation		***With confirmation***
29	***I***	Temperature units Pressure units	°C, °F bar, psi		***°C*** ***bar***
44	***I***	Operation HC2	Jointly with HC1 Independently		***Jointly with HC1***
46	***I***	Operation HC3/P	Jointly with HC1 Independently		***Jointly with HC1***
70	***S***	Display software version			
Time program heating / cooling, circuit 1					
500	***U***	Pre-selection (Day / Week)	Mon-Sun, Mon-Fri, Sat-Sun, Monday, Tuesday, …		***Mon-Sun***
501	***U***	1st phase On (start)	00:00... --:--	10 min	***6:00***
502	***U***	1st phase Off (end)	00:00... --:--	10 min	***22:00***
503	***U***	2nd phase On (start)	00:00... --:--	10 min	***--:--***
504	***U***	2nd phase Off (end)	00:00... --:--	10 min	***--:--***
505	***U***	3rd phase On (start)	00:00... --:--	10 min	***--:--***
506	***U***	3rd phase Off (end)	00:00... --:--	10 min	***--:--***
516	***U***	Default values, Circuit 1	No, Yes		***No***
		Yes + OK: The default values memorised in the regulator replace and cancel the customised heating programs. Your customised settings are therefore lost.			

Line		Function	Setting range or display	Setting increment	Basic setting
Time program heating / cooling, circuit 2					
		Only with the 2nd circuit kit option.			
520	***U***	Pre-selection (Day / Week)	Mon-Sun, Mon-Fri, Sat-Sun, Monday, Tuesday, …		***Mon-Sun***
521	***U***	1st phase On (start)	00:00... --:--	10 min	***6:00***
522	***U***	1st phase Off (end)	00:00... --:--	10 min	***22:00***
523	***U***	2nd phase On (start)	00:00... --:--	10 min	***--:--***
524	***U***	2nd phase Off (end)	00:00... --:--	10 min	***--:--***
525	***U***	3rd phase On (start)	00:00... --:--	10 min	***--:--***
526	***U***	3rd phase Off (end)	00:00... --:--	10 min	***--:--***
536	***U***	Default values, Circuit 2	No, Yes		***No***
		Yes + OK: The default values memorised in the regulator replace and cancel the customised heating programs. Your customised settings are therefore lost.			
Time program 4 / DHW (Only with the DHW kit option)					
560	***U***	Pre-selection (Day / Week)	Mon-Sun, Mon-Fri, Sat-Sun, Monday, Tuesday, …		***Mon-Sun***
561	***U***	1st phase On (start)	00:00... --:--	10 min	***00:00***
562	***U***	1st phase Off (end)	00:00... --:--	10 min	***05:00***
563	***U***	2nd phase On (start)	00:00... --:--	10 min	***14:30***
564	***U***	2nd phase Off (end)	00:00... --:--	10 min	***17:00***
565	***U***	3rd phase On (start)	00:00... --:--	10 min	***--:--***
566	***U***	3rd phase Off (end)	00:00... --:--	10 min	***--:--***
576	***U***	Default values	No, Yes		***No***
		Yes + OK: The default values memorised in the regulator replace and cancel the customised heating programs. Your customised settings are therefore lost.			
Holidays, heating circuit 1 (For the Holiday program is active, the heating mode should be on AUTO).					
641	***U***	Preselection	Period 1 to 8		***Period 1***
642	***U***	Period Start (Day / Month)	01.01... 31.12	1	
643	***U***	Period End (Day / Month)	01.01... 31.12	1	
648	***U***	Operating level	Frost protection, Reduced		***Frost protection***
Holidays, heating circuit 2 (For the Holiday program is active, the heating mode should be on AUTO).					
		If the installation consists of 2 heating circuits (Only with the 2nd circuit kit option).			
651	***U***	Preselection	Period 1 to 8		***Period 1***
652	***U***	Period Start (Day / Month)	01.01... 31.12	1	
653	***U***	Period End (Day / Month)	01.01... 31.12	1	
658	***U***	Operating level	Frost protection, Reduced		***Frost protection***

Line		Function	Setting range or display	Setting increment	Basic setting
Heating adjustment, circuit 1					
710	***U***	Comfort setpoint	Reduced setpoint… Comfort setpoint maximum	0.5 °C	***20 °C***
712	***U***	Reduced setpoint	Frost protection setpoint… Comfort setpoint	0.5 °C	***19 °C***
714	***U***	Frost protection setpoint	4 °C… Reduced setpoint	0.5 °C	***8 °C***
716	***S***	Comfort setpoint maximum	Comfort setpoint... 35 °C	1 °C	***28 °C***
720	***I***	Heating curve slope (see fig. 48, page 47)	0.1... 4	0.02	***0.5***
721	***I***	Off-set of the heating curve (see fig. 49, page 47)	-4.5 °C... 4.5 °C	0.5 °C	***0***
730	***I***	Summer / Winter heating limits	8 °C... 30 °C	0.5 °C	***18 °C***
		When the average of the Outdoor temperatures over the past 24 hours reaches 18°C, the regulator switches off the heating (as an economy measure). During summer mode, the display shows "Eco". This function is only active in automatic mode.			
740	***I***	Flow temp setpoint min	8 °C... Flow temp setpoint max	1 °C	***17 °C***
		(with dynamic radiator, adjust from 30 to 35°C)			
741	***I***	Flow temp setpoint max	Flow temp setpoint min... 70 °C	1 °C	***55 °C***
		Floor heating system = 50 °C / Radiators = 65 °C. **Important Note :** Maximum temperature limitation is not a safety function as required by ground heating.			
750	***S***	Room influence	1%... 100%	1%	***50%***
		If the installation is fitted with a room thermostat: This function enables you to choose the ambient temperature's influence on the setting. If no value is entered, the setting is made based on the temperature control. If the parameter is set at 100%, the setting is only based on the ambient temperature.			
760	***S***	Room temperature limitation	0.5... 4 °C	0.5 °C	***0.5 °C***
		As soon as the room temperature = [Setpoint line **710** (ex. 20°C) + Room temperature limitation setpoint line **760** (ex. 0.5 °C)] > 20.5 °C => The heat pump is stopped. It restarts when the room temperature falls below the setpoint (in the example, Room temperature < 20.0 °C).			
780	***S***	Quick setback	Off, Down to reduced setpoint, Down to frost prot setpoint		***Off***
790	***S***	Optimum start control max (Early start to switch to the comfort setting.)	0... 360 min	10 min	***180 min***
791	***S***	Optimum stop control max (Early stop to switch from the comfort setting to the reduced setting.)	0... 360 min	10 min	***30 min***
800	***S***	Reduced setpoint increase start	-30... 10 °C, --	1 °C	***--***
801	***S***	Reduced setpoint increase end	-30... 10 °C, --	1 °C	***-5 °C***
830	***S***	Mixer valve boost	0... 50 °C	1 °C	***0 °C***
834	***S***	Actuator running time	30... 650 s	1 s	***240 s***

Line		Function	Setting range or display	Setting increment	Basic setting
850	**I**	Floor curing function (fig. 50)			***Off***
		- Off: Early interruption of the current programme, programme inactive. - Operational heating. - Heating ready for occupation. - Operational heating + ready heating. - Ready heating + operational heating. - Manual: Manual mode enables you to programme your own concrete slab drying time.The function ends automatically after 25 days.			

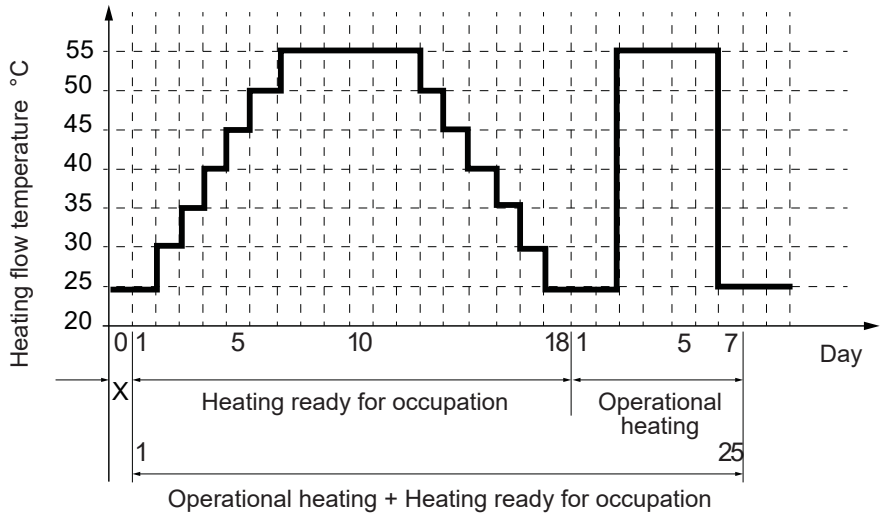

fig. 50 - Diagram of the concrete slab drying programmes

Please comply with the standards and instructions of the manufacturer of the building ! A good performance of this function is only possible with an installation correctly implemented (hydraulic, electricity and adjustments) ! This function can be stopped by anticipation when setting the adjustment on "Off".

851	**I**	Floor curing setpoint manually (if line 850 = manual)	0... 95 °C	1 °C	***25 °C***
		This function enables you to set the custom concrete slab drying temperature. This temperature remains fixed. The concrete slab-drying programme stops automatically after running for 25 days.			
856	**I**	Floor curing day current	0... 32		***0***
857	**I**	Floor curing day completed	0... 32		***0***
900	**S**	Operating mode changeover	None, Protection mode, Reduced, Comfort, Automatic	1	***Reduced***
		Operating mode at end of concrete slab drying period			
Cooling circuit 1					
		If the installation is fitted with the cooling kit (Only with the cooling kit option).			
901	**U**	Operating mode	Protection, Automatic, Reduced, Comfort		***Protection***
902	**U**	Comfort cooling setpoint	5... 40 °C	0.5 °C	***24 °C***
903	**U**	Reduced setpoint	5... 40°C		***26 °C***
908	**I**	Flow temp setp at OT° 25°C	6... 35 °C	0.5 °C	***20 °C***
909	**I**	Flow temp setp at OT° 35°C	6... 35 °C	0.5 °C	***16 °C***
912	**I**	Cooling limit at OT°	--, 8... 35 °C	0.5 °C	***24 °C***
913	**S**	Lock time at end of heating / cooling	--, 8... 100	1 h	***24 h***
918	**S**	Summer comp start at OT°	20... 50 °C	1 °C	***26 °C***
919	**S**	Summer comp end at OT°	20... 50 °C	1 °C	***40 °C***
920	**S**	Summer comp setp increase	--, 1... 10 °C	1 °C	***4 °C***
923	**S**	Flow temp setp min OT° 25°C	6... 35 °C	0.5 °C	***18 °C***
924	**S**	Flow temp setp min OT° 35°C	6... 35 °C	0.5 °C	***18 °C***

Line		Function	Setting range or display	Setting increment	Basic setting
928	**S**	Room influence	--, 1... 100 %	1 %	**80 %**
		If the installation is fitted with a room thermostat: This function enables you to choose the ambient temperature's influence on the setting. If no value is entered, the setting is made based on the temperature control. If the parameter is set at 100%, the setting is only based on the ambient temperature.			
932	**S**	Room temp limitation	--, 0.5... 4 °C	0.5 °C	**0.5 °C**
938	**S**	Mixing valve decrease	0... 20 °C	1 °C	**0 °C**
941	**S**	Actuator running time	30... 650 s	1 s	**240 s**
963	**S**	With primary controller / system pump	No, Yes		**No***
		*Basic setting : 1 circuit = No ; 2 circuits = Yes.			
Heating adjustment, Circuit 2					
		Only with the 2nd circuit kit option (If the installation consists of 2 heating circuits).			
1010	**U**	Comfort setpoint	Reduced setpoint… Comfort setpoint maximum	0.5 °C	**20 °C**
1012	**U**	Reduced setpoint	Frost protection setpoint… Comfort setpoint	0.5 °C	**19 °C**
1014	**U**	Frost protection setpoint	4 °C… Reduced setpoint	0.5 °C	**8 °C**
1016	**S**	Comfort setpoint maximum	Comfort temp... 35 °C	1 °C	**28 °C**
1020	**I**	Heating curve slope (see fig. 48, page 47)	0.1... 4	0.02	**0.5**
1021	**I**	Off-set of the heating curve (fig. 49, page 47)	-4.5... 4.5 °C	0.5 °C	**0 °C**
1030	**I**	Summer / Winter heating limits	8... 30 °C	0.5 °C	**18 °C**
		When the average of the outdoor temperatures over the past 24 hours reaches 18°C, the regulator switches off the heating (as an economy measure). During summer mode, the display shows "Eco". This function is only active in automatic mode.			
1040	**I**	Flow temp setpoint min	8... Flow temp setpoint max	1 °C	**17 °C**
		(with dynamic radiator, adjust from 30 to 35°C)			
1041	**I**	Flow temp setpoint max	Flow temp setpoint min... 95 °C	1 °C	**55 °C**
		Floor heating system = 50 °C / Radiators = 65 °C. **Important Note :** Maximum temperature limitation is not a safety function as required by ground heating.			
1050	**S**	Room influence	1 %... 100 %	1 %	**50 %**
		If the installation is fitted with a room thermostat: This function enables you to choose the ambient temperature's influence on the setting. If no value is entered, the setting is made based on the temperature control. If the parameter is set at 100%, the setting is only based on the ambient temperature.			
1060	**S**	Room temperature limitation	0.5... 4 °C	0.5 °C	**0.5 °C**
		As soon as the room temperature = [Setpoint line **1010** (ex. 20°C) + Room temperature limitation setpoint line **1060** (ex. 0.5 °C)] > 20.5 °C => The heat pump is stopped. It restarts when the room temperature falls below the setpoint (in the example, Room temperature < 20.0 °C).			
1080	**S**	Quick setback	Off, Down to reduced setpoint, Down to frost prot setpoint		**Off**
1090	**S**	Optimum start control max	0... 360 min	10 min	**180 min**
1091	**S**	Optimum stop control max	0... 360 min	10 min	**30 min**
1100	**S**	Reduced setpoint increase start	-30... 10 °C, --	1 °C	**--**
1101	**S**	Reduced setpoint increase end	-30... 10 °C, --	1 °C	**-5 °C**
1130	**S**	Mixer valve increase	0... 50 °C	1 °C	**0 °C**
1134	**S**	Actuator running time	30... 650 s	1 s	**240 s**

Line		Function	Setting range or display	Setting increment	Basic setting
1150	**I**	Floor curing function (fig. 50, page 54)			**Off**
		- Off: Early interruption of the current programme, programme inactive. - Operational heating. - Heating ready for occupation. - Operational heating + ready heating. - Ready heating + operational heating. - Manual: Manual mode enables you to programme your own concrete slab drying time.The function ends automatically after 25 days.			
1151	**I**	Floor curing setpoint manually (if line 1150 = manual)	0... 95 °C	1 °C	**25 °C**
		This function enables you to set the custom concrete slab drying temperature. This temperature remains fixed. The concrete slab-drying program stops automatically after running for 25 days.			
1156	**I**	Floor curing day current	0... 32		**0**
1157	**I**	Floor curing day completed	0... 32		**0**
1200	**S**	Operating mode changeover	None, Protection mode, Reduced, Comfort, Automatic		**Reduced**
		Operating mode at end of concrete slab drying period.			
Cooling circuit 2					
		If the installation is fitted with the cooling kit (Only with the cooling kit option).			
1201	**U**	Operating mode	Protection, Automatic, Reduced, Comfort		**Protection**
1202	**U**	Comfort cooling setpoint	17... 40 °C	0.5 °C	**24 °C**
1203	**U**	Reduced setpoint	5... 40°C	0.5 °C	**26 °C**
1208	**I**	Flow temp setp at OT° 25°C	6... 35 °C	0.5 °C	**20 °C**
1209	**I**	Flow temp setp at OT° 35°C	6... 35 °C	0.5 °C	**16 °C**
1212	**I**	Cooling limit at OT°	--, 8... 35 °C	0.5 °C	**24 °C**
1213	**S**	Lock time at end of heating / cooling	--, 8... 100	1 h	**24 h**
1218	**S**	Summer comp start at OT°	20... 50 °C	1 °C	**26 °C**
1219	**S**	Summer comp end at OT°	20... 50 °C	1 °C	**40 °C**
1220	**S**	Summer comp setp increase	--, 1... 10 °C	1 °C	**4 °C**
1223	**S**	Flow temp setp min OT° 25°C	6... 35 °C	0.5 °C	**18 °C**
1224	**S**	Flow temp setp min OT° 35°C	6... 35 °C	0.5 °C	**18 °C**
1228	**S**	Room influence	--, 1... 100 %	1 %	**80 %**
		If the installation is fitted with a room thermostat: This function enables you to choose the ambient temperature's influence on the setting. If no value is entered, the setting is made based on the temperature control. If the parameter is set at 100%, the setting is only based on the ambient temperature.			
1232	**S**	Room temp limitation	--, 0.5... 4 °C	0.5 °C	**0.5 °C**
1238	**S**	Mixing valve decrease	0... 20 °C	1 °C	**0 °C**
1241	**S**	Actuator running time	30... 650 s	1 s	**240 s**
1263	**S**	With primary controller / system pump	No, Yes		**No***
		*Basic setting : 1 circuit = No ; 2 circuits = Yes.			

Line		Function	Setting range or display	Setting increment	Basic setting
Domestic hot water (Only with the cooling kit option)					
1600	***U***	Operating mode	Off, On, Eco		***On***
1610	***U***	Nominal setpoint	Reduced setpoint (line 1612)… 65 °C	1	***55 °C***
		The backup electrical system is required to reach this level.			
1612	***U***	Reduced setting	8 °C... Nominal setting (line 1610)	1	***40 °C***
1620	***I***	Release of DHW load	24h / day Heating circuit time programme Programme 4 / DHW Off-peak tariff (Off-peak) Programme 4 / DHW and Off-peak		***Programme 4 / DHW***
		24h / day: The temperature of the DHW is constantly maintained at the DHW comfort setting.			
		Heating circuit time programme: The DHW is produced according to the programming for the ambient temperature (with 1 hour in advance when switched on).			
		Programme 4 / DHW: The DHW programme is separate form the heating circuit programme.			
		Off-peak tariff* : The electrical backup heating is only authorised to operate during the off-peak period.			
		T'prog 4/DHW or low-tariff *: The electrical backup heating is authorised to operate during the comfort period or off peak.			
		* - Connect the "Power Provider" contact to input EX2 (see fig. 43, page 41). In the case of a day /night contract, the electric back-ups for the DHW tank are subject to the power supplier's tariffs. Switching on the electric back-up for the DHW tank is only authorised during off-peak hours.			
1640	***I***	Legionella function	Off, Periodically (depending line setting 1641), Fixed weekday (depending line setting 1642)		***Off***
1641	***I***	Legionella function periodically	1 to 7	1 day	***7***
1642	***S***	Legionella function weekday	Monday, Tuesday,...		***Saturday***
1644	***S***	Legionella funct time			
1645	***S***	Legionella funct setpoint	55... 75 °C	1 °C	***60 °C***
1646	***S***	Legionella funct duration	2... 360 min	1 min	***60 min***
1647	***S***	Legionella funct circ pump	Off, On		***Off***
1660	***S***	Circulating pump release	Time program 3/HCP, DHW release, Time program 4/DHW, Time program 5		***DHW release***
Swimming pool (Only with swimming pool kit option)					
2055	***U***	Setpoint solar heating	8... 80 °C		***26 °C***
2056	***U***	Setpoint source heating	8... 35 °C		***22 °C***
2057	***S***	Swi diff source heating	0.5... 3 °C		***0.5 °C***
2065	***S***	Charging priority solar	Priority 1, Priority 2, Priority 3		***Priority 1***
2080	***S***	With solar integration	No, Yes		***Yes***
Primary controller / system pump					
2127	***I***	Pump speed max system pump cooling	70... 100 %	1 %	***100 %***
2154	***I***	Pump speed max system pump	70... 100 %	1 %	***100 %***

Line		Function	Setting range or display	Setting increment	Basic setting
Heat pump (HP)					
2779	***I***	Pump speed max condenser pump cooling mode	70... 100 %	1 %	***100 %***
2793	***I***	Pump speed max condenser pump	70... 100 %	1 %	***100 %***
2803	***S***	Overrun time cond pump	8... 600 s	1 s	***240s***
2843	***S***	Compressor off time min	0... 120 min	1 min	***8 min***
2844	***S***	Switch-off temp max	8... 100 °C	1 °C	***75 °C***
2862	***S***	Locking time stage 2 / mod	0... 40 min	1 min	***5 min***
2873	***S***	Compressor mod run time	10... 600 s	1 s	***240 s***
2882	***S***	Release integr electric flow	0... 500 °Cmin	1 °Cmin	***100 °Cmin***
2884	***S***	Release el flow below OT Electrical release - start-up with outdoor temperature	-30... 30 °C		***2 °C***
2886	***S***	Compensation heat deficit	Off, On, Only with floor curing fct		***Off***
2907	***S***	Silent mode power max	--, 1... 100 %	1 %	***--***
2916	***S***	Max setpoint HP DHW charg	8... 80 °C	1 °C	***--***
2920	***S***	With electrical utility lock (EX1) (*fig. 44, page 41*)	Locked (Blocked on standby), Released		***Released***
		Released : HP = ON _ Back-up DHW = off _ 1st back-up HP = off _ 2nd back-up HP = off _ Boiler = ON **Locked (Blocked on standby)** : HP = off _ Back-up DHW = off _ 1st back-up HP = off _ 2nd back-up HP = off _ Boiler = ON			
3026	***S***	Silent mode on	00:00... --:--	10 min	***22:00***
3027	***S***	Silent mode off	00:00... --:--	10 min	***07:00***
3028	***S***	Silent mode speed incr start	-50... 50 °C	1 °C	***8 °C***
3029	***S***	Silent mode speed incr end	-50... 50 °C	1 °C	***7 °C***
Energy meter					
3095 --> 3110 : Not used					
3113	***U***	Energy brought in		Kwh	***--***
		Cumulation of total consumed electrical energy. Electrical energy consumed = Electrical energy absorbed by outdoor unit + electric energy absorbed by the heating electrical backup and / or DHW electrical backup (if installed).			
3121 --> 3123 : Not used					
3124	***U***	Energy brought in heating 1 (N - 1)		Kwh	***--***
3125	***U***	Energy brought in DHW 1		Kwh	***--***
3126	***U***	Energy brought in cooling 1		Kwh	***--***
3128 --> 3130 : Not used					
3131	***U***	Energy brought in heating 2 (N - 2)		Kwh	***--***
3132	***U***	Energy brought in DHW 2		Kwh	***--***
3133	***U***	Energy brought in cooling 2		Kwh	***--***
3135 --> 3137 : Not used					
3138	***U***	Energy brought in heating 3 (N - 3)		Kwh	***--***
3139	***U***	Energy brought in DHW 3		Kwh	***--***
3140	***U***	Energy brought in cooling 3		Kwh	***--***
3142 --> 3144 : Not used					

Note: "Energy" Counters increment as of 1 July each year.

Line		Function	Setting range or display	Setting increment	Basic setting
3145	**U**	Energy brought in heating 4 (N - 4)		Kwh	--
3146	**U**	Energy brought in DHW 4		Kwh	--
3147	**U**	Energy brought in cooling 4		Kwh	--
3149 --> 3151 : Not used					
3152	**U**	Energy brought in heating 5 (N - 5)		Kwh	--
3153	**U**	Energy brought in DHW 5		Kwh	--
3154	**U**	Energy brought in cooling 5		Kwh	--
3156 --> 3158 : Not used					
3159	**U**	Energy brought in heating 6 (N - 6)		Kwh	--
3160	**U**	Energy brought in DHW 6		Kwh	--
3161	**U**	Energy brought in cooling 6		Kwh	--
3163 --> 3165 : Not used					
3166	**U**	Energy brought in heating 7 (N - 7)		Kwh	--
3167	**U**	Energy brought in DHW 7		Kwh	--
3168	**U**	Energy brought in cooling 7		Kwh	--
3170 --> 3172 : Not used					
3173	**U**	Energy brought in heating 8 (N - 8)		Kwh	--
3174	**U**	Energy brought in DHW 8		Kwh	--
3175	**U**	Energy brought in cooling 8		Kwh	--
3177 --> 3179 : Not used					
3180	**U**	Energy brought in heating 9 (N - 9)		Kwh	--
3181	**U**	Energy brought in DHW 9		Kwh	--
3182	**U**	Energy brought in cooling 9		Kwh	--
3184 --> 3186 : Not used					
3187	**U**	Energy brought in heating 10 (N - 10)		Kwh	--
3188	**U**	Energy brought in DHW 10		Kwh	--
3189	**U**	Energy brought in cooling 10		Kwh	--
3190	**S**	Reset fixed day storage	No, Yes		**No**
		Reset the historical counters (1 to 10). The general counter (parameter 3113) is not reset.			
3197	**S**	Compressor electrical power	0.1...60	0.1	**See table below**

Set the parameter 3197 according to the outdoor unit

Heat Pump	Outdoor unit	Parameter 3197
Model 5	WOYA060KLT	1.59
Model 6	WOYA060KLT	1.9
Model 8	WOYA080KLT	2.13
Model 10	WOYA100KLT	3.4

3264 --> 3267 : Not used

Line		Function	Setting range or display	Setting increment	Basic setting
Additional generator (Boiler connection)					
3692	***S***	With DHW charging	Locked, Substitute, Complement, Instantly		***Substitute***
		- DHW Instantly : When DHW request, the HP and the boiler are put into operation. The HP will stop when the primary return temperature is over 55 °C. **- DHW Substitute :** If the outdoor temperature is above 2 °C, the operation of the HP when DHW request last 5 minutes at least. The HP operating time can be extended depending on the outdoor temperature. The boiler will activate then.			
3700	***S***	Release below outdoor temperature	-50... 50 °C	1 °C	***2 °C***
3701	***S***	Release above outdoor temperature	-50... 50 °C	1 °C	***--***
3705	***S***	Overrun time	0... 120 min	1 min	***20 min***
3720	***S***	Switching integral (for boiler relief)	0... 500 °Cmin	1 °Cmin	***100 °Cmin***
3723	***S***	Locking time	1... 120 min	1 min	***30 min***
Domestic hot water (DHW)					
5024	***S***	Switching diff	0... 20 °C	1 °C	***7 °C***
5030	***S***	Charging time limitation	10... 600 min	10 min	***90 min***
		(with dynamic radiator, adjust 40 min)			
5055	***S***	Recooling temp	8... 95 °C	1 °C	***65 °C***
5057	***S***	Recooling collector	Off, Summer, Always		***Summer***
5061	***S***	Electric immersion heater release	24h / day, Release of DHW, Programme 4 / DHW		***Release of DHW***
5093	***S***	With solar integration	No, Yes		***Yes***
Installation configuration					
5700	***I***	Pre-setting	1,2,3,... 9	1	***1***
		This control enables you to choose one of the 4 pre-selected installation configurations. The hydraulic layouts for the various configurations are detailed in the section: "Installation Configurations". - Pre-setting 1: 1 heating circuit with or without electrical back-up, with DHW tank. - Pre-setting 2: 2 heating circuits with or without electrical back-up, with DHW tank. - Pre-setting 3: Boiler connection and 1 heating circuit and DHW tank. - Pre-setting 4: Boiler connection and 2 heating circuits and DHW tank. - Pre-setting 5 and more: Not used.			
5710	***S***	Heating circuit 1	Off, On		***On***
5711	***S***	Cooling circuit 1	Off, 4-pipe system cooling, 2-pipe system cooling		***Off***
		Set the parameter to **"2-pipe system cooling"** with the cooling kit.			
5715	***S***	Heating circuit 2	Off, On		***On***
5716	***S***	Cooling circuit 2	Off, 4-pipe system cooling, 2-pipe system cooling		***Off***
		Set the parameter to **"2-pipe system cooling"** with the cooling kit. If the installation consists of 2 heating circuits.			
5731	***S***	DHW controlling element Q3	No charging request, Charging pump, Diverting valve		***Diverting valve***
5740	***S***	Output el imm heater K6	0.1... 99 kW		***1.5 kW***
		5740 = Value of the DHW electrical backup - kW			
5806	***I***	Type el imm heater flow	1 : 3-stage, 2 : 2-stage excluding, 3 : 2-stage complementary, 4 : Modulating UX		***3 : 2-stage complementary***
5811	***S***	Output el imm heater K25	0.1-...99		***3 kW***
		Without electrical backup = 0 ; Single phase electrical backup (Factory setting) = 3 ; 3-phase electrical backup = 9			

Line		Function	Setting range or display	Setting increment	Basic setting
5813	**S**	Output el imm heater K26	0.1-...99		**3 kW**
		Without electrical backup = 0 ; Single phase electrical backup 3 kW = 0 ; Single phase electrical backup 6 kW (Factory setting) = 3 ; 3-phase electrical backup = 0			
5950	**S**	Function input H1 (Connector X86, terminals B1 & M)			**None**
		0: None, **1:** Op'mode change zones+DHW, **2:** Optg mode changeover DHW, **3:** Op'mode changeover zones, **4:** Op'mode changeover zone 1, **5:** Op'mode changeover zone 2, **6:** Op'mode changeover zone 3, **8:** Error/alarm message, **9:** Consumer request VK1, **10:** Consumer request VK2, **11:** Release swi pool source heat, **13:** Release swi pool solar, **14:** Operating level DHW, **15:** Operating level HC1, **16:** Operating level HC2, **17:** Operating level HC3, **18:** Room thermostat HC1, **19:** Room thermostat HC2, **20:** Room thermostat HC3, **21:** DHW flow switch, **24:** Pulse count, **26:** Dewpoint monitor, **27:** Flow temp setp incr hygro, **30:** Swi-on command HP stage 1, **35:** Status info suppl source, **36:** Charg prio DHW sol fuel boil, **43:** Ventilation switch 1, **44:** Ventilation switch 2, **45:** Ventilation switch 3, **50:** Flow measurement Hz, **51:** Consumer request VK1 10V, **52:** Consumer request VK2 10V, **54:** Pressure measurement 10V, **55:** Humidity measurement 10V, **56:** Room temp 10V, **59:** Flow measurement 10V, **60:** Temp measurement 10V, **61:** Air quality measurement 10V			
5953	**S**	Input value 1 H1	0...1000		**0**
5954	**S**	Function value 1 H1	-100.. 500		**0**
5955	**S**	Input value 2 H1	0... 1000		**10**
5956	**S**	Function value 2 H1	-100... 500		**100**
5960	**S**	Function input H3 (Connector X86, terminals B2 & M)			**None**
		0: None, **1:** Op'mode change zones+DHW, **2:** Optg mode changeover DHW, **3:** Op'mode changeover zones, **4:** Op'mode changeover zone 1, **5:** Op'mode changeover zone 2, **6:** Op'mode changeover zone 3, **8:** Error/alarm message, **9:** Consumer request VK1, **10:** Consumer request VK2, **11:** Release swi pool source heat, **13:** Release swi pool solar, **14:** Operating level DHW, **15:** Operating level HC1, **16:** Operating level HC2, **17:** Operating level HC3, **18:** Room thermostat HC1, **19:** Room thermostat HC2, **20:** Room thermostat HC3, **21:** DHW flow switch, **24:** Pulse count, **26:** Dewpoint monitor, **27:** Flow temp setp incr hygro, **30:** Swi-on command HP stage 1, **35:** Status info suppl source, **36:** Charg prio DHW sol fuel boil, **43:** Ventilation switch 1, **44:** Ventilation switch 2, **45:** Ventilation switch 3, **50:** Flow measurement Hz, **51:** Consumer request VK1 10V, **52:** Consumer request VK2 10V, **54:** Pressure measurement 10V, **55:** Humidity measurement 10V, **56:** Room temp 10V, **59:** Flow measurement 10V, **60:** Temp measurement 10V, **61:** Air quality measurement 10V			
5963	**S**	Input value 1 H3	0...1000		**0**
5964	**S**	Function value 1 H3	-100.. 500		**0**
5965	**S**	Input value 2 H3	0... 1000		**10**
5966	**S**	Function value 2 H3	-100... 500		**100**
5980	**S**	Function input EX1			**Electrical utility lock E6**
		0: None, **1:** Electrical utility lock E6, **2:** Low-tariff E5, **4:** Overload source E14, **5:** Pressure switch source E26, **6:** Flow switch source E15, **7:** Flow switch consumers E24, **8:** Manual defrost E17, **9:** Common fault HP E20, **10:** Fault soft starter E25, **12:** Low-pressure switch E9, **13:** High-pressure switch E10, **14:** Overload compressor 1 E11, **15:** Error/alarm message, **16:** Mains supervision E21, **18:** Pressure diff defrost E28, **19:** Pres sw source int circ E29, **20:** Flow sw source int circ E30, **21:** Smart grid E61, **22:** Smart grid E62, **25:** Optg mode change HCs, **26:** DHW push.			
5981	**S**	Contact type input EX1	Normally-closed contact (NC) Normally-opened contact (NO)		**NO**
5982	**S**	Function input EX2			**Low-tariff E5**
		0: None, **1:** Electrical utility lock E6, **2:** Low-tariff E5, **4:** Overload source E14, **5:** Pressure switch source E26, **6:** Flow switch source E15, **7:** Flow switch consumers E24, **8:** Manual defrost E17, **9:** Common fault HP E20, **10:** Fault soft starter E25, **12:** Low-pressure switch E9, **13:** High-pressure switch E10, **14:** Overload compressor 1 E11, **15:** Error/alarm message, **16:** Mains supervision E21, **18:** Pressure diff defrost E28, **19:** Pres sw source int circ E29, **20:** Flow sw source int circ E30, **21:** Smart grid E61, **22:** Smart grid E62, **25:** Optg mode change HCs, **26:** DHW push.			
5983	**S**	Contact type input EX2	Normally-closed contact (NC) Normally-opened contact (NO)		**NC**
5985	**S**	Contact type input EX3	Normally-closed contact (NC) Normally-opened contact (NO)		**NO**

Line		Function	Setting range or display	Setting increment	Basic setting
6098	**S**	Readjustm collector sensor	-20... 20 °C	0.1 °C	**0 °C**
6100	**S**	Readjustm outdoor sensor	-3... 3 °C	0.1 °C	**0 °C**
6117	**S**	Central setp compensation	1... 100°C	1 °C	**5 °C**
6120	**S**	Frost protection plant	On, Off		**On**
6201	**S**	Reset sensors	No, Yes		**No**
6205	**S**	Reset to default parameters	No, Yes		**No**
6220	**S**	Software version (RVS)	0... 99		**--**
6300	**S**	Info 1 OEM	0... 65535		**--**
6301	**S**	Info 2 OEM	0... 65535		**--**
LPB system					
6600	**S**	Device address	0... 16		**1**
Error					
6710	**U**	Reset Defaut relais	No, Yes		**No**
6711	**U**	Reset HP	No, Yes		**No**
6800	**S**	History 1	Time, Date, Error code		
6802	**S**	History 2	Time, Date, Error code		
6804	**S**	History 3	Time, Date, Error code		
6806	**S**	History 4	Time, Date, Error code		
6808	**S**	History 5	Time, Date, Error code		
6810	**S**	History 6	Time, Date, Error code		
6812	**S**	History 7	Time, Date, Error code		
6814	**S**	History 8	Time, Date, Error code		
6816	**S**	History 9	Time, Date, Error code		
6818	**S**	History 10	Time, Date, Error code		
Maintenance / special regime					
7070	**S**	HP interval	--, 1... 240	1 month	**--**
7071	**S**	HP time since maint Reset ? (no, yes)	0... 240	1 month	**0**
7073	**S**	Cur starts compr1/hrs run (since the 6 last weeks) Reset ? (no, yes)	0... 12		**0**
7141	**U**	Emergency operation	Off, On		**Off**
		Off: Heat pump functions normally (with boosters if necessary). On: Heat pump uses the electric boost system or the boiler connection. Use the “On” position only in Assist mode or Test mode: may result in high power bills.			
7142	**S**	Emergency operating function type	Manual, Automatic		**Manual**
		Manual: Emergency mode is not active when a fault occurs (Emergency mode = OFF). Automatic: Emergency mode is active when a fault occurs (Emergency mode = ON). In "Automatic" position, the energy cost can be onerous if the error is not detected and eliminated.			
7150	**I**	Simulation outdoor temp	-50... 50 °C	0.5	**--**
7202	**S**	Commissioning heat pump	Off, On		**Off**
7207	**S**	Output selection heat pump modulating	0... 100 %	1 %	**0 %**
7208	**S**	Output selection speed Q9	0... 100 %	1 %	**--**

Line		Function	Setting range or display	Setting increment	Basic setting
Inputs / outputs test					
7700	***I***	Relay test			***No test***
		This consists of instructing the regulator's relays one by one and checking their outputs. This enables you to check that the relays are working and that the cabling is correct (Check that each appliance in the installation is operating correctly / See *"Designation of terminals of the control board", page 81*). **0:** No test, **1:** Everything is on STOP, **2:** Relay output QX1 : heat pump CC1 (if 1 circuit) or heat pump CC2 (if 2 circuits), **3:** Relay output QX2 : Electrical back-up (1st stage) or Boiler connection distribution valve, **4:** Relay output QX3 : Electrical back-up (2nd stage) or Boiler connection contact, **5:** Relay output QX4 : DHW distribution valve, **6:** Relay output QX5 : DHW Electrical back-up, **7:** Relay output QX6 , **8:** Relay output QX31 : Heat circ mix valve open Y1 (or control pilot-wire), **9:** Relay output QX32 : Heat circ mix valve close Y2, **10:** Relay output QX33 : heat pump CC1 if 2 circuits (mixed circuit, the less hot), **11:** Relay output QX34, **12:** Relay output QX35 : Swimming pool distribution valve, **13:** Relay output QX21 module 1, **14:** Relay output QX22 module 1, **15:** Relay output QX23 module 1, **16:** Relay output QX21 module 2, **17:** Relay output QX22 module 2, **18:** Relay output QX23 module 2, **19-21**: Not used.			
		The display shows the “Key” symbol. Pressing the Info button displays "Error 368". **Warning: The component being tested is receiving electrical power throughout the test.**			
7710	***I***	Output UX1 test (Not used)	0... 100%	1	--
7716	***I***	Output UX2 test (PWM pump signal)	0... 100%	1	--
7722	***I***	Digital output DO2 (Not used)	Off, On		***Off***
7723	***I***	Heat pump D3 (Not used)	Off, On		***Off***
7724	***I***	Outputs test UX3 ("Inverter" command)	0... 100 %		--
7725	***I***	Voltage value U4 (Ux3) (Not used)	0... 10 v		--
7804	***I***	Sensor temperature BX1 (HP flow temperature)	-28... 350 °C		--
7805	***I***	Sensor temperature BX2 (HP return temperature)	-28... 350 °C		--
7806	***I***	Sensor temperature BX3 (DHW temperature)	-28... 350 °C		--
7807	***I***	Sensor temperature BX4 (Outdoor temperature)	-28... 350 °C		--
7830	***I***	Sensor temperature BX21 module 1 (Not used)	-28... 350 °C		--
7831	***I***	Sensor temperature BX22 module 1 (Not used)	-28... 350 °C		--
7832	***I***	Sensor temperature BX21 module 2 (Not used)	-28... 350 °C		--
7833	***I***	Sensor temperature BX22 module 2 (Not used)	-28... 350 °C		--
7858	***I***	Input signal H3	None, Closed (ooo), Open (---), Pulse, Frequency Hz, Voltage V		***None***
7911	***I***	Input EX1 (Power shedding)	0, 230 V		--
7912	***I***	Input EX2 (Tariffs day/night)	0, 230 V		--
7913	***I***	Input EX3 (External fault)	0, 230 V		--
State					
8000	***I***	State heating circuit 1			--
8001	***I***	State heating circuit 2			--
8003	***I***	State DHW			--
8004	***I***	State cooling circuit 1			--
8006	***I***	State heat pump			--
8007	***I***	State solar			--
8010	***I***	State buffer			--
8011	***I***	State swimming pool			--
8022	***I***	State supplementary source			--
8025	***I***	State cooling circuit 2			--

Line		Function	Setting range or display	Setting increment	Basic setting
Generator diagnosis					
8400	***I***	Compressor 1	Off, On		***Off***
8402	***I***	Electrical resistance flow 1	Off, On		***Off***
8403	***I***	Electrical resistance flow 2	Off, On		***Off***
8406	***I***	Condenser pump	Off, On		***Off***
8407	***S***	Speed condenser pump	0...100%		***--***
8410	***U***	Return temp HP	0... 140 °C		***--***
		Setpoint (flow) HP			***--***
8412	***U***	Flow temp HP	0... 140 °C		***--***
		Setpoint (flow) HP			***--***
8413	***U***	Compressor modulation	0... 100%		***--***
8414	***I***	Modulation electric flow	0... 100%		***--***
8425	***S***	Temp diff condensor	-50... 140 °C		***--***
8450	***S***	Hours run compressor 1	00:00		***--***
8454	***S***	Locking time Heat Pump Reset ? (no, yes)	0... 2730 h		***--***
8455	***S***	Counter number of locks HP Reset ? (no, yes)	0... 65535		***--***
8456	***S***	Hours run electrical flow Reset ? (no, yes)	0... 2730 h		***--***
8457	***S***	Start counter electrical flow Reset ? (no, yes)	0... 65535		***--***
8458	***I***	State smart grid	Draw disabled, Draw free, Draw wish, Draw forced		***Draw free***
8460	***I***	Heat pump throughput	0... 65535 l/min		***--***
Diagnostics consumers					
8700	***U***	Outdoor temperature	-50... 50 °C		***--***
8701	***U***	Outdoor temp min Reset ? (no, yes)	-50... 50 °C		***50 °C***
8702	***U***	Outdoor temp max Reset ? (no, yes)	-50... 50 °C		***-50 °C***
8703	***I***	Outdoor temp attenuated Reset ? (no, yes)	-50... 50 °C		***--***
		This is the average of the outdoor temperature over a 24-hour period. This value is used for automatic Summer / Winter switchover (line 730).			
8704	***I***	Outdoor temp composite	-50... 50 °C		***--***
		The mixed outdoor temperature is a combination of the current outdoor temperature and the average outdoor temperature calculated by the regulator. This value is used for calculating the initial temperature.			
8730	***I***	Heating circuit pump, circuit 1	Off, On		***Off***
8731	***I***	Mixer valve HC1 open	Off, On		***Off***
8732	***I***	Mixer valve HC1 closed	Off, On		***Off***
8740	***U***	Room temperature 1	0... 50 °C		***--***
		Room setting 1			***20 °C***
8743	***U***	Flow temperature 1	0... 140 °C		***--***
		Flow temperature setpoint 1			***--***
8749	***I***	Room thermostat 1	No demand, Demand		***No demand***

Line		Function	Setting range or display	Setting increment	Basic setting
8756	**U**	Cooling flow temperature 1	0... 140 °C		--
		Cooling flow temperature setpoint 1			--
8820	**I**	DHW pump	Off, On		**Off**
8821	**I**	El imm heater DHW	Off, On		**Off**
8830	**U**	DHW (domestic hot water) temperature	0... 140 °C		--
		DHW temperature setpoint			**50 °C**
8832	**I**	DHW temp 2	0... 140 °C		--
8840	**S**	Hours run DHW pump	0... 2730 h		--
8841	**S**	Start counter DHW pump	0... 199999		--
8842	**S**	Hours run electric DHW	0... 2730 h		--
8843	**S**	Start counter electric DHW	0... 65535		--
8950	**I**	Common flow temperature	0... 140 °C		--
		Common flow temperature setpoint			--
8957	**I**	Common flow setpoint, Refrigerant	0... 140 °C		--
9005	**I**	Water pressure 1	-100... 500 bar		--
9006	**I**	Water pressure 2	-100... 500 bar		--
9009	**I**	Water pressure 3	-100... 500 bar		--
9010	**I**	Measurement room temp 1	0...50 °C		--
9011	**I**	Measurement room temp 2	0... 50 °C		--
9031	**I**	Relay output QX1	Off, On		**On**
9032	**I**	Relay output QX2	Off, On		**On**
9033	**I**	Relay output QX3	Off, On		**On**
9034	**I**	Relay output QX4	Off, On		**Off**
9035	**I**	Relay output QX5	Off, On		**Off**

▶ Information display

Various data can be displayed by pressing the i button.

Depending on the type of unit, configuration and operating state, some of the info lines listed below may not appear.

- Possible error messages from the error code list (see table, page 68).
- Possible service messages from the maintenance code list.
- Possible special mode messages.
- Various data (see below).

Designation	*Line*
Floor drying current setpoint.	-
Current drying day.	-
Terminated drying days.	-
State heat pump.	8006
State supplementary source.	8022
State DHW.	8003
State swimming pool.	8011
State heating circuit 1.	8000
State heating circuit 2.	8001
State cooling circuit 1.	8004
Outdoor temperature.	8700
Room temperature 1.	8740
Room setpoint 1.	
Flow temperature 1.	8743
Flow temperature setpoint1.	
Room temperature 2.	8770
Room setpoint 2.	
Flow temperature 2.	8773
Flow temperature setpoint 2.	
DHW (domestic hot water) temperature.	8830
Heat pump return temperature.	8410
Setpoint (return) HP.	
Heat pump flow temperature.	8412
Setpoint (flow) HP.	
Swimming pool temperature.	8900
Swimming pool temperature setpoint.	
Minimum remaining stop time for compressor 1.	-
Minimum remaining running time for compressor 1.	-

Fault Diagnosis

Depending on whether the fault comes from the outdoor unit or the hydraulic unit, the fault may be indicated by the digital display or the LED on the interface cards.

Faults in the Hydraulic Unit

Faults or breakdowns on the hydraulic unit are indicated by the display on the user interface.

The display shows the 🔔 symbol.
Press the *i* key for more details on the origin of the fault.
When the error has been resolved, the faults are re-initialised at zero automatically.

■ Hydraulic unit: Fault visible on the digital display.

Error	*Designation*	*Probable causes*	*Proposed actions*
10	Outside sensor	Short-circuit. Unplugged or disconnected sensor. Faulty sensor. Other fault.	Check the sensor's wiring. Replace the sensor.
32	Flow sensor 2		
33	Flow sensor HP		
44	Return sensor HP		
50	DHW sensor 1		
60	Room sensor 1		
65	Room sensor 2		
83	BSB, short circuit	Wiring problem (between the sensor or remote control, display and controller).	Check the wiring.
127	Legionella temp	Anti-legionella temp setpoint not reached.	Check the wiring of the DHW backup / boiler connection.
212	Internal comm failure	Unplugged or disconnected sensor.	Check the sensor's wiring.
369	External	External safety triggered EX3 (*fig. 44, page 41*).	-
370	Thermodynamic source	See details page 70.	-
441	BX31 (Temperature sensor 2)	Short-circuit. Unplugged or disconnected sensor. Faulty sensor. Other fault.	Check the sensor's wiring. Replace the sensor.
442	BX32 no function		
443	BX33 no function		
444	BX34 (Swimming pool return temperature)		
516	Heat pump missing	Loss of connection between controller and HP.	Check the wiring between X60 and the interface board (*fig. 55, page 80*).

Before performing any maintenance, make sure that <u>all power supplies</u> have been cut off.

Stored energy: after cutting off the power supplies,
wait for 10 minutes before accessing the internal parts of the equipment.

Frost protection is not available when the heat pump is not powered up.

PWM circulator signals

	Off	The pump does not work, no electrical power.
	Green On	The pump works normally.
	Green/Red blink	Circulation pump operation in "alert" mode (under unusual conditions such as: dry running, motor overload due to impurities in the water, etc.).
	Red blink	Operating error due to a persistent external fault (abnormal voltage/current, external pump blockage, reverse flow, etc.). Circulation pump stops. The circulation pump restarts once the issue is resolved.
	Red On	Operating error / Permanent shutdown. Circulation pump replacement.

▶ Faults in the outdoor unit

■ **Hydraulic unit: Flashing of the diode visible on the interface board.**

Error	*Interface Board*		*Error designation (models 5, 6 and 8)*	*Error designation (model 10)*
	LED Green	*LED Red*		
11	*1*	*1*	Serial communication error	
23	*2*	*3*	Combination Error	
32	*3*	*2*	UART communications error	
42	*4*	*2*	Hydraulic unit heat-exchange thermistor error	
62	*6*	*2*	Outdoor unit main PCB error	
63	*6*	*3*	-	Inverter error
65	*6*	*5*	Outdoor unit IPM error	
71	*7*	*1*	Discharge thermistor error	
72	*7*	*2*	Compressor thermistor error	
73	*7*	*3*	-	Heat-exchange thermistor error (centre)
			Heat-exchange thermistor error (outlet)	Heat-exchange thermistor error (outlet)
74	*7*	*4*	Outdoor thermistor error	
77	*7*	*7*	-	Heat sink thermistor error (P.F.C.)
78	*7*	*8*	Expansion valve thermistor error	
84	*8*	*4*	Current sensor error	
86	*8*	*6*	Pressure sensor error / Pressure switch error	
94	*9*	*4*	Current tripped (permanent stoppage)	
95	*9*	*5*	Detection of compressor position error (permanent stoppage)	Compressor motor control error (permanent stoppage)
97	*9*	*7*	Outdoor unit fan motor error	
A1	*10*	*1*	Discharge temperature protection (permanent stoppage)	
A3	*10*	*3*	Compressor temperature protection (permanent stoppage)	
A5	*10*	*5*	Low pressure abnormal	Pressure error
AC	*10*	*12*	-	Outdoor unit radiator temperature error

▼ Outdoor Unit : model 10

When an error occurs:

- The LED "ERROR" (2) blinks.
- Press once on the switch "ENTER" (S132).
- The LED blinks several times depending on the error's type (see below).

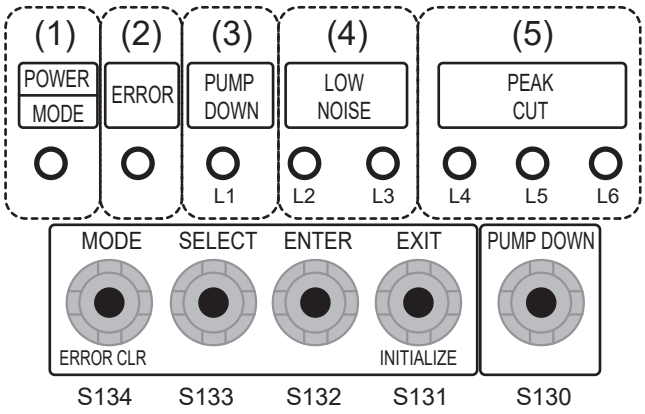

Error	Outdoor Unit Board (L1)	(L2)	(L3)	(L4)	(L5)	(L6)	Error designation
11	1	1	O	O	●	●	Serial communication error after operation
	1	1	O	●	O	O	Serial communication error during operation
23	2	3	O	O	O	●	Different combinations used by indoor and outdoor units
62	6	2	O	O	O	●	Outdoor unit main PCB error
63	6	3	O	O	O	●	Inverter error
65	6	5	O	O	●	●	Outdoor unit IPM error
	6	5	O	O	O	●	IPM board temperature error
71	7	1	O	O	O	●	Discharge thermistor error
72	7	2	O	O	O	●	Compressor thermistor error
73	7	3	O	O	●	O	Heat-exchange thermistor (intermediate) error.
	7	3	O	O	●	●	Heat-exchange thermistor (outlet) error.
74	7	4	O	O	O	●	Outdoor thermistor error
77	7	7	O	O	O	●	Outdoor unit heat sink temp. thermistor error
78	7	8	O	O	O	●	Expansion valve thermistor error
84	8	4	O	O	O	●	Current sensor error
86	8	6	O	●	O	O	Pressure switch error
	8	6	O	●	●	O	Pressure sensor error
94	9	4	O	O	O	●	Trip detection
95	9	5	O	O	O	●	Detection of compressor position error Compressor start up error
97	9	7	O	O	●	●	Outdoor unit fan1 motor error
A1	10	1	O	O	O	●	Discharge temperature protection
A3	10	3	O	O	O	●	Compressor temperature protection
A5	10	5	O	O	O	●	Low pressure abnormal
AC	10	12	O	O	●	●	Outdoor unit radiator temperature error

o : LED Off ; ● : LED on

Maintenance of the installation

Before performing any maintenance, make sure that <u>all power supplies</u> have been cut off.

Stored energy: after cutting off the power supplies, wait for 10 minutes before accessing the internal parts of the equipment.

Hydraulic checks

If frequent refills are required it is absolutely essential that you check for any leaks. If refilling and a pressure reset are necessary, check what type of fluid was used initially.

Recommended filling pressure: between 1 and 2 bar (the exact filling pressure is determined by the water pressure in the installation).

Periodically,

- Check the expansion circuit pressure (pre-inflation of 1 bar) and the correct operation of the safety valve.
- Check the shut-off.
- Check the correct operation of the distribution valve.

Maintenance of the DHW tank (option)

Maintenance on the tank must be carried out annually (frequency may vary according to water hardness).

- Please refer to the instructions supplied with the DHW tank.

Outdoor unit checks

- Remove any dust from the exchanger, if necessary, while making sure not to damage the blades.
- Straighten the blades using a comb.
- Check that there is nothing blocking the air flow.
- Check the fan.
- Verify that condensate drain is not obstructed.

Refrigeration circuit checks

- Check there are no leaks (connections, valves…).

Electrical circuit checks

- Check the connections and re-tighten if necessary.
- Check the state of the cables and plates.

Other maintenance

Emptying the hydraulic unit

- Remove the front panel from the HP.
- Open the drain valve.
- Open the hydraulic unit's manual bleeder valve.
- Open the installation's bleeder valve(s).

Distribution valve

If the installation is fitted with a hot water tank.

Ensure the distribution valve is fitted in the correct direction:

- Channel **AB**: Outlet to the hydraulic unit.
- Channel **A** open: Return from DHW tank.
- Channel **B** open: Return from the heating circuit.

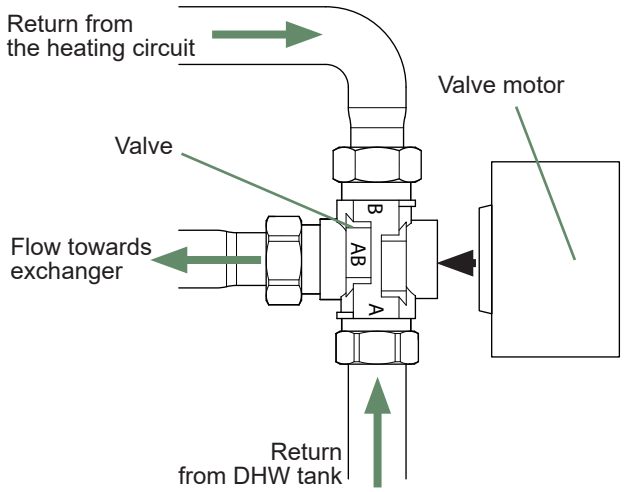

fig. 51 - Mounting the distribution valve

Appendix

Filling the installation with gas

This operation is reserved for installers familiar with the legislation for handling refrigerants.
Creating a vacuum with a calibrated vacuum pump is essential (see APPENDIX 1).
Never use equipment used previously with any refrigerant other than a HFC.
Only remove the refrigeration circuit caps when performing the refrigeration connections.

If the outdoor temperature is below +10°C

- You must use the triple evacuation method (see APPENDIX 2).
- We recommend installing a dehydrator filter (and this is highly recommended if the outdoor temperature is below +5°C).

APPENDIX 1

Method for calibrating and checking a vacuum pump

- Check the vacuum pump's oil level.
- Connect the vacuum pump to the vacuum gauge as shown in the diagram.

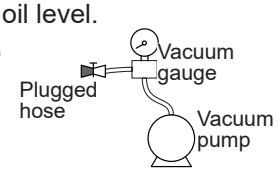

- Pump down for 3 minutes.
- After 3 minutes, the pump reaches its threshold vacuum limit and the vacuum gauge's needle stops moving.
- Compare the obtained pressure value against the table of values. Depending on the temperature, this pressure should be lower than that shown in the table.

  => If this is not the case, replace the gasket, hose or pump.

T °C	*5°C<T<10°C*	*10°C<T<15°C*	*15°C < T*
Pmax ***- bar*** ***- mbar***	0.009 9	0.015 15	0.020 20

APPENDIX 2

Triple Evacuation Method

- Connect the *Manifold* high-pressure hose to the filling hole (gas connection). A valve must be fitted to the vacuum pump's hose so you can shut it off.

a) Create a vacuum until the desired value is reached and maintain this value for 30 mins (see table in APPENDIX 1),

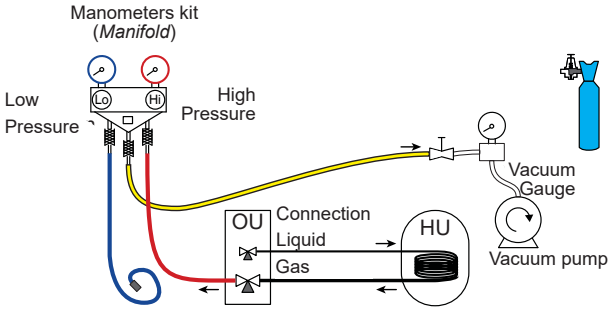

b) Switch off the vacuum pump, close the valve at the end of the service hose (yellow), connect this hose to the expansion valve on the nitrogen bottle, fill to 2 bar, close the hose's valve again,

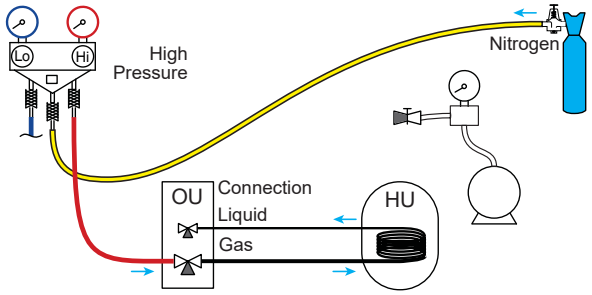

c) Connect this hose to the vacuum pump again, switch it on and slowly open the hose's valve.

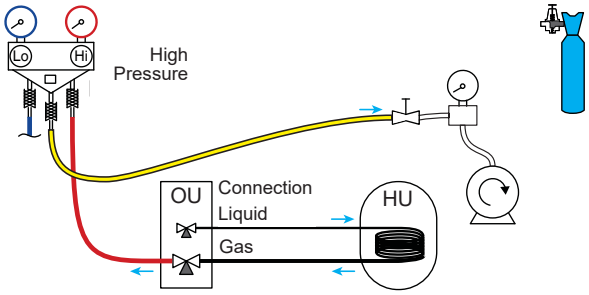

d) Repeat this operation at least three times.

<u>Remember:</u> performing these operations using refrigerant is strictly prohibited.

▼ Seal test

- Remove the protective plug (**B**) from the filling hole (*Schrader*) in the gas valve (large diameter).
- Connect the high pressure hose from the *Manifold* to the filling hole (fig. 52).
- Connect the nitrogen bottle to the *Manifold* (only use dehydrated nitrogen type U).
- Fill the refrigeration circuit with nitrogen to maximum 10 bar (**gas-condenser-liquid connection system**).
- Maintain this pressure in the circuit for 30 minutes.

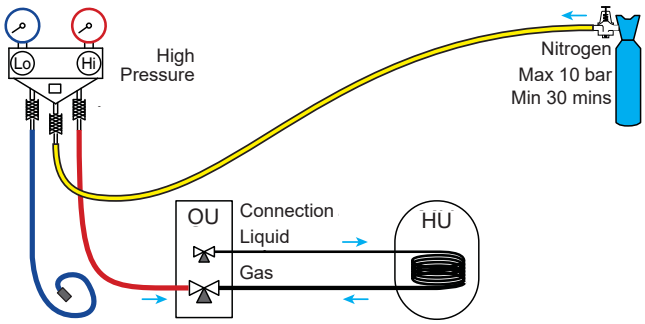

- If a pressure drop occurs, bring it back down to 1 bar and look for leaks with a leak detector, repair and repeat the test.

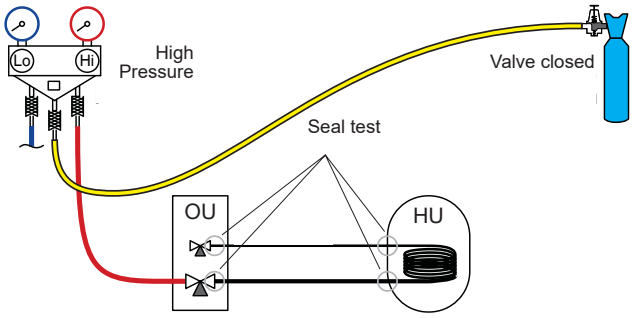

- Once the pressure is steady and there are no leaks, empty the nitrogen by leaving the pressure above atmospheric pressure (between 0.2 and 0.4 bar).

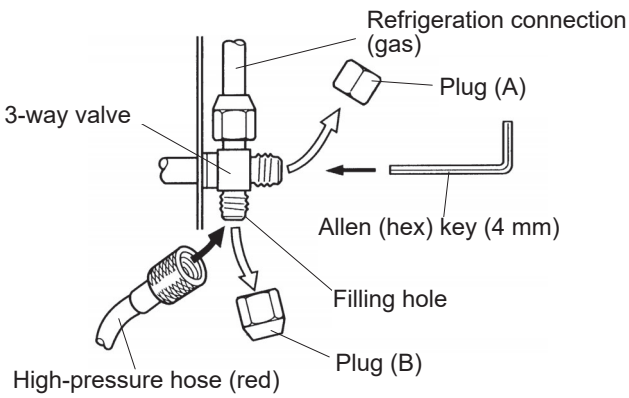

fig. 52 - Connecting the hose to the gas valve

▼ Creating a vacuum

The triple evacuation method (APPENDIX 2) is strongly recommended for any installation and especially when the outdoor temperature is below 10°C.

- If necessary, calibrate the manometers(s) of the *Manifold* to 0 bar. Adjust the vacuum gauge to the atmospheric pressure (≈ 1013 mbar).
- Connect the vacuum pump to the *Manifold*. Connect a vacuum gauge if the vacuum pump is not equipped with one.

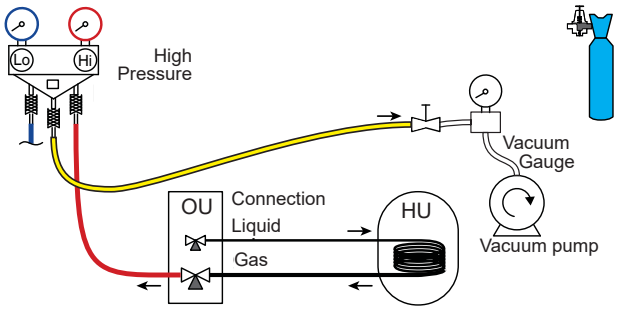

- Create a vacuum until the residual pressure* in the circuit falls below the value given in the following table (* measured with the vacuum gauge).

T °C	*5°C<T<10°C*	*10°C<T<15°C*	*15°C < T*
Pmax			
- bar	0.009	0.015	0.020
- mbar	9	15	20

- Let the pump continue to operate for another 30 minutes minimum after reaching the vacuum.
- Close the *Manifold* valve, then stop the vacuum pump **without disconnecting any of the hoses in place.**

■ **1 heating circuit + DHW tank**

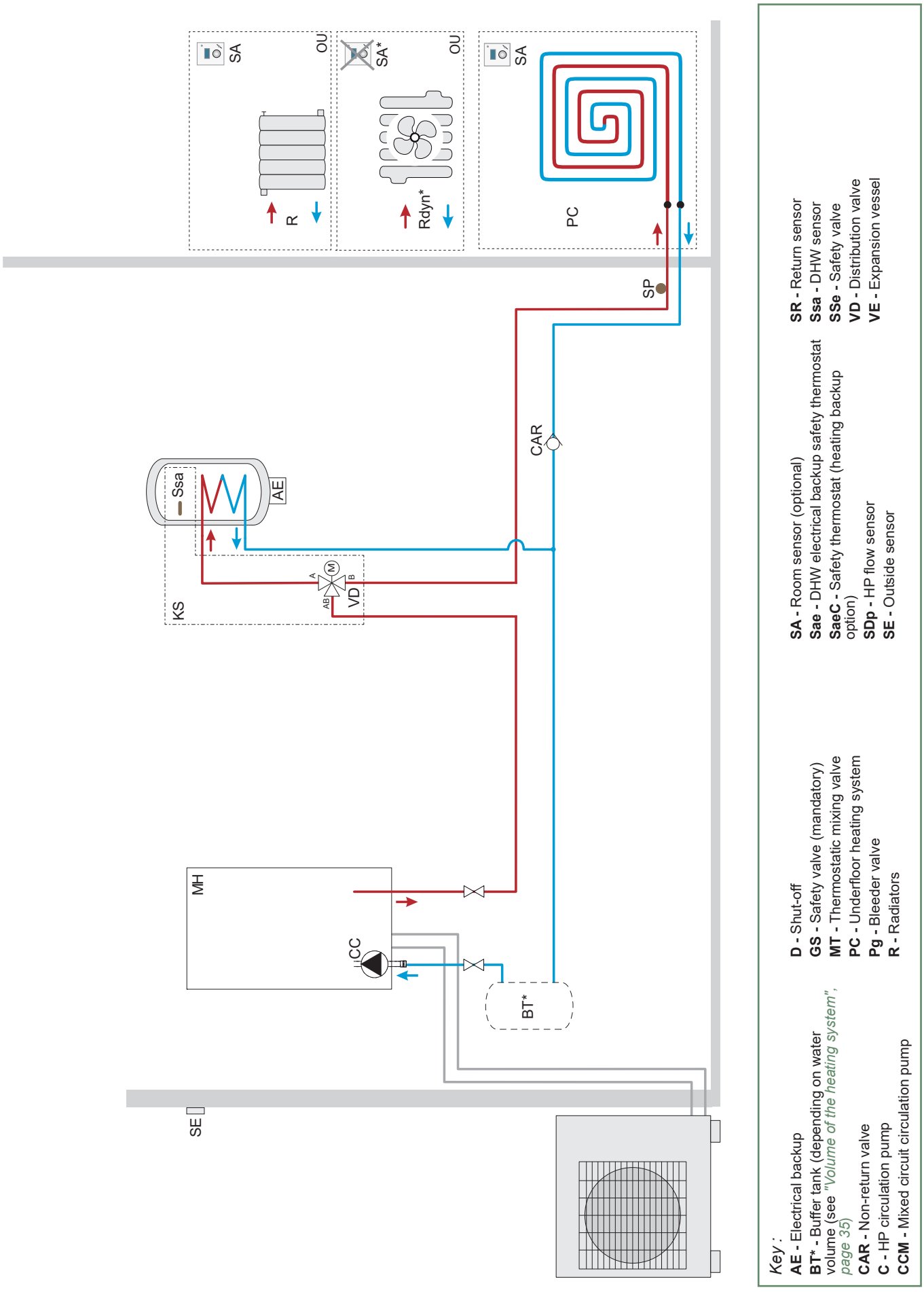

■ **2 heating circuits + DHW tank**

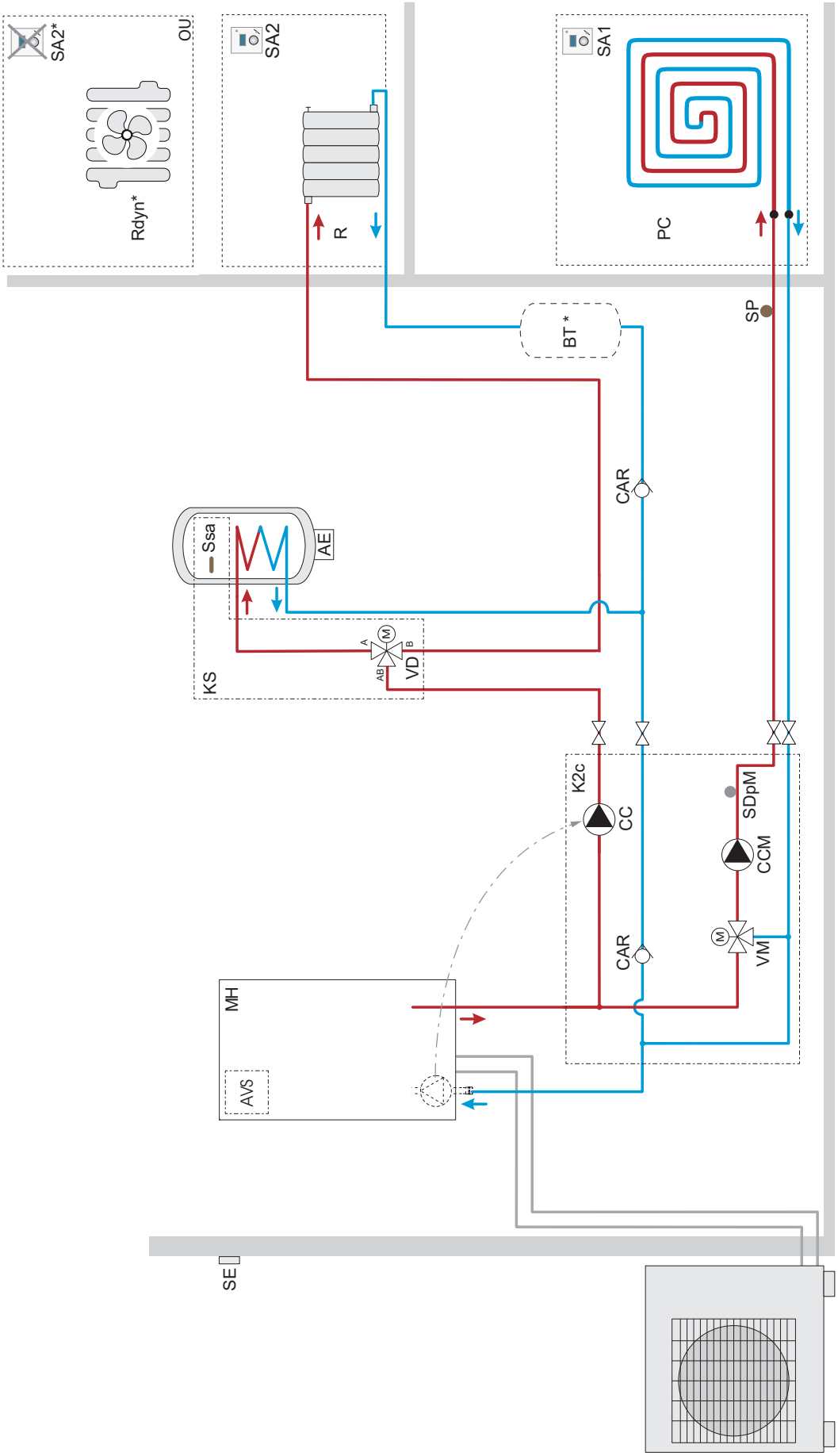

Key :

AE - Electrical backup
AVS - Extension board, 2 circuits
BT* - Buffer tank (depending on water volume (see : *"volume of the heating system", page 35*)
CAR - Non-return valve
C - HP circulation pump
CCM - Mixed circuit circulation pump
D - Shut-off
GS - Safety valve (mandatory)
K2c - 2 circuit kit
MT - Thermostatic mixing valve
PC - Underfloor heating system
Pg - Bleeder valve
R - Radiators
SA - Room sensor (optional)
Sae - DHW electrical backup safety thermostat
SaeC - Safety thermostat (heating backup option)
SDp - HP flow sensor
SDpM - Mixed circuit flow sensor
SE - Outside sensor
SP - Heated floor safety fuse
SR - Return sensor
Ssa - DHW sensor
SSe - Safety valve
VD - Distribution valve
VE - Expansion vessel
VM - Circuit mixer valve

▶ Electrical Cabling Plans

Before performing any maintenance, make sure that <u>all power supplies</u> have been cut off.

Stored energy: after cutting off the power supplies, wait for 10 minutes before accessing the internal parts of the equipment.

▼ Outdoor unit

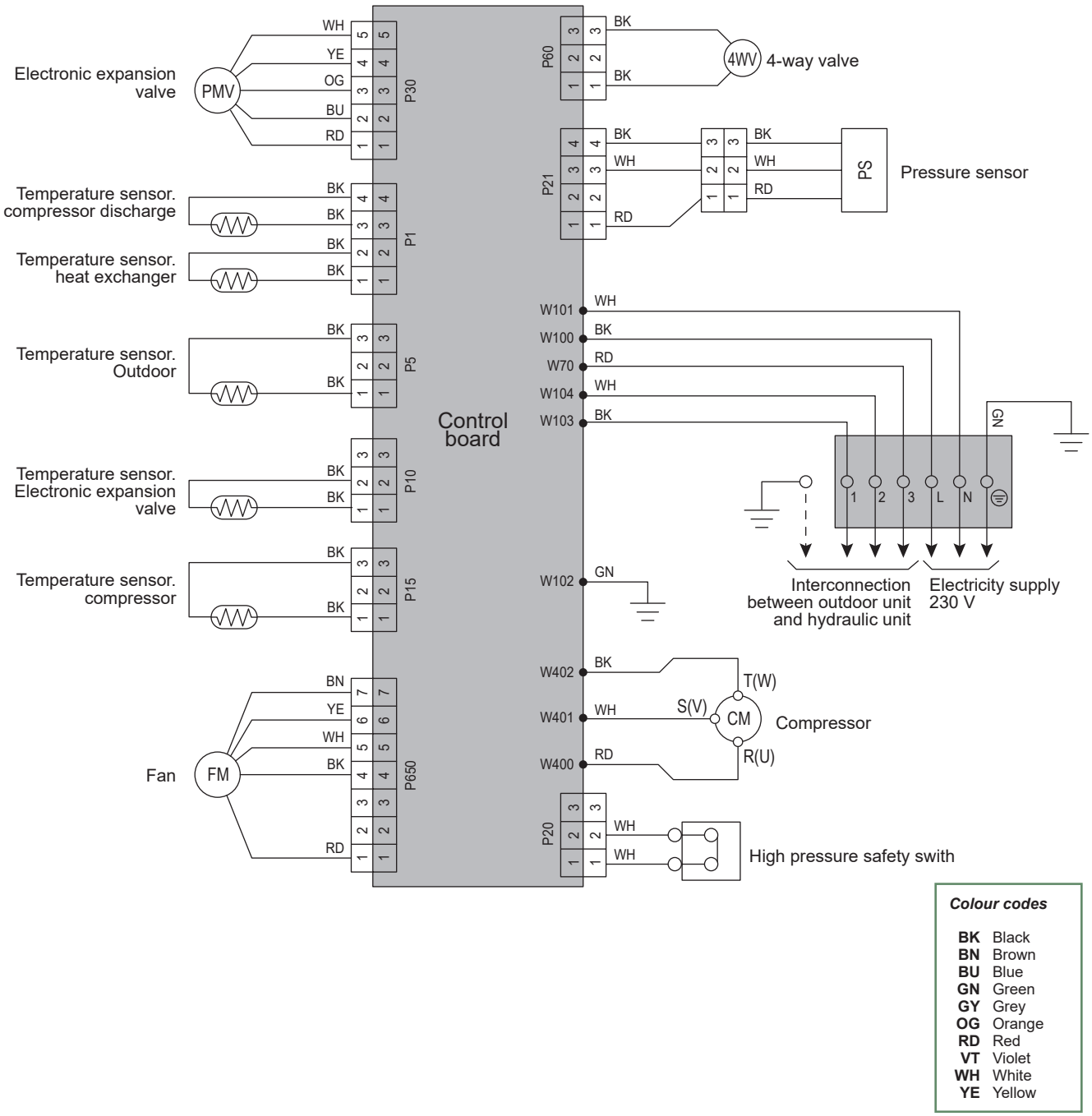

fig. 53 - Outdoor unit electrical cabling model 5,6 & 8

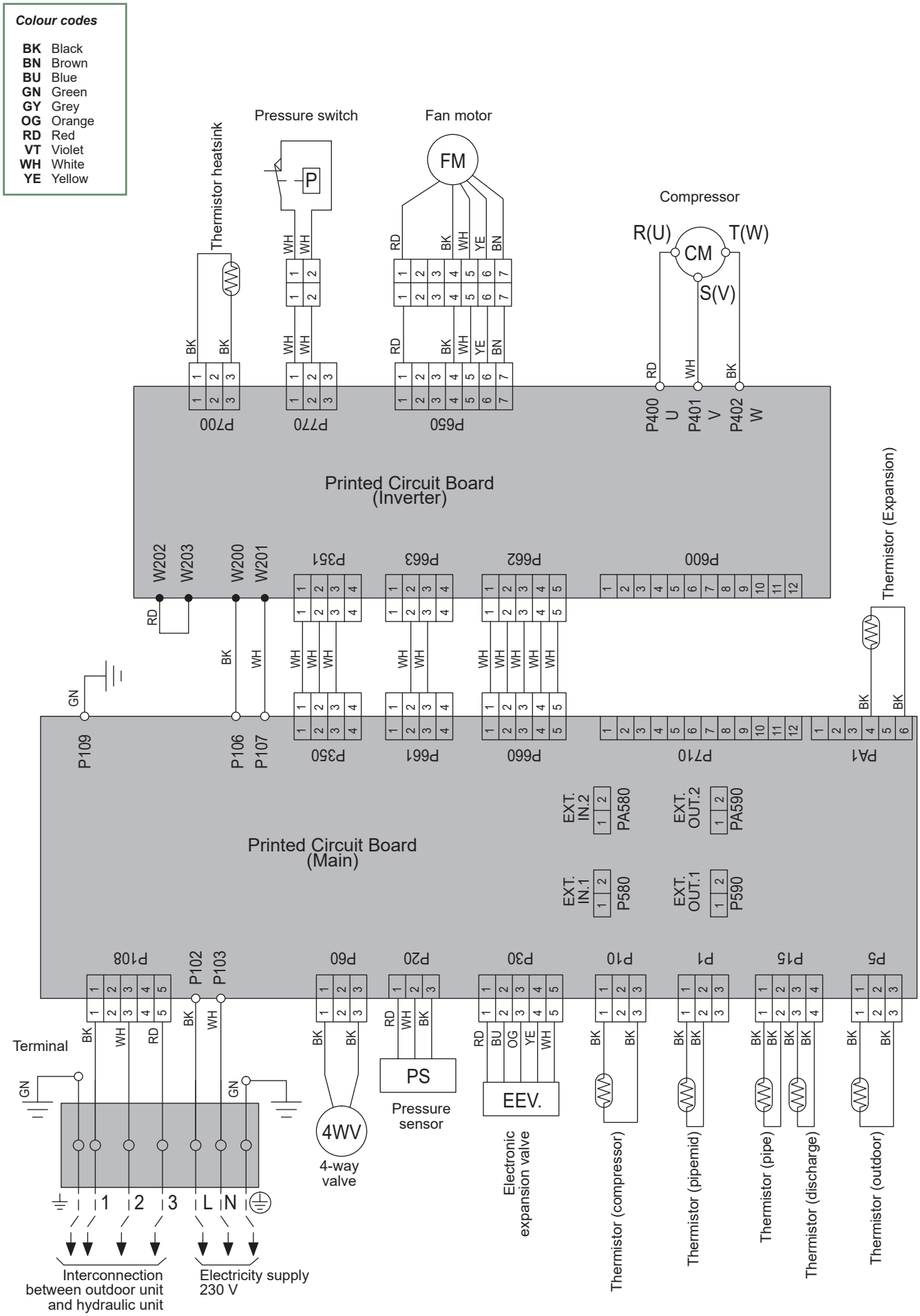

fig. 54 - Outdoor unit electrical cabling model 10

▼ Hydraulic unit

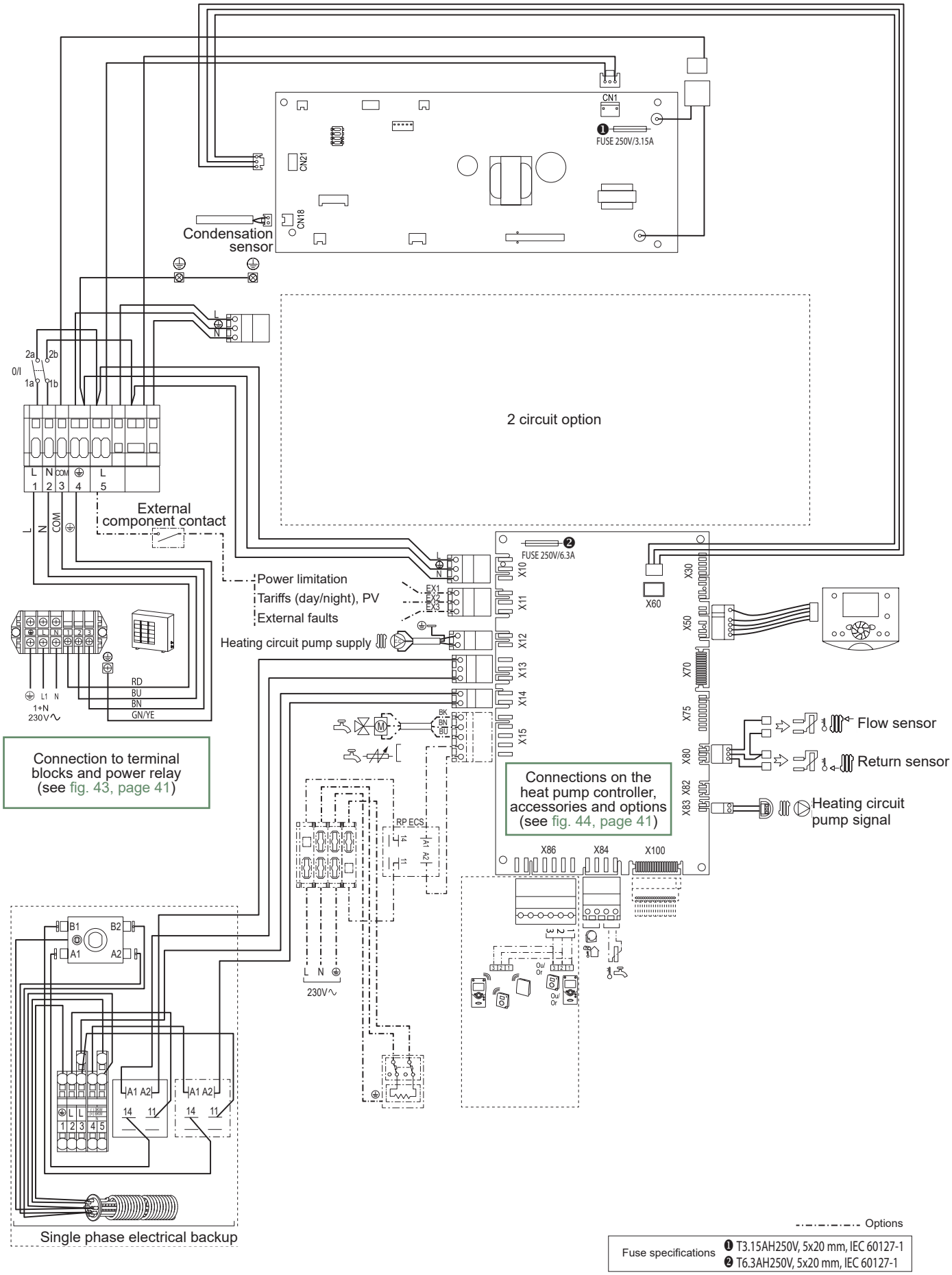

fig. 55 - Electrical wiring of hydraulic unit (excluding connections made by installer)

▶ Designation of terminals of the control board

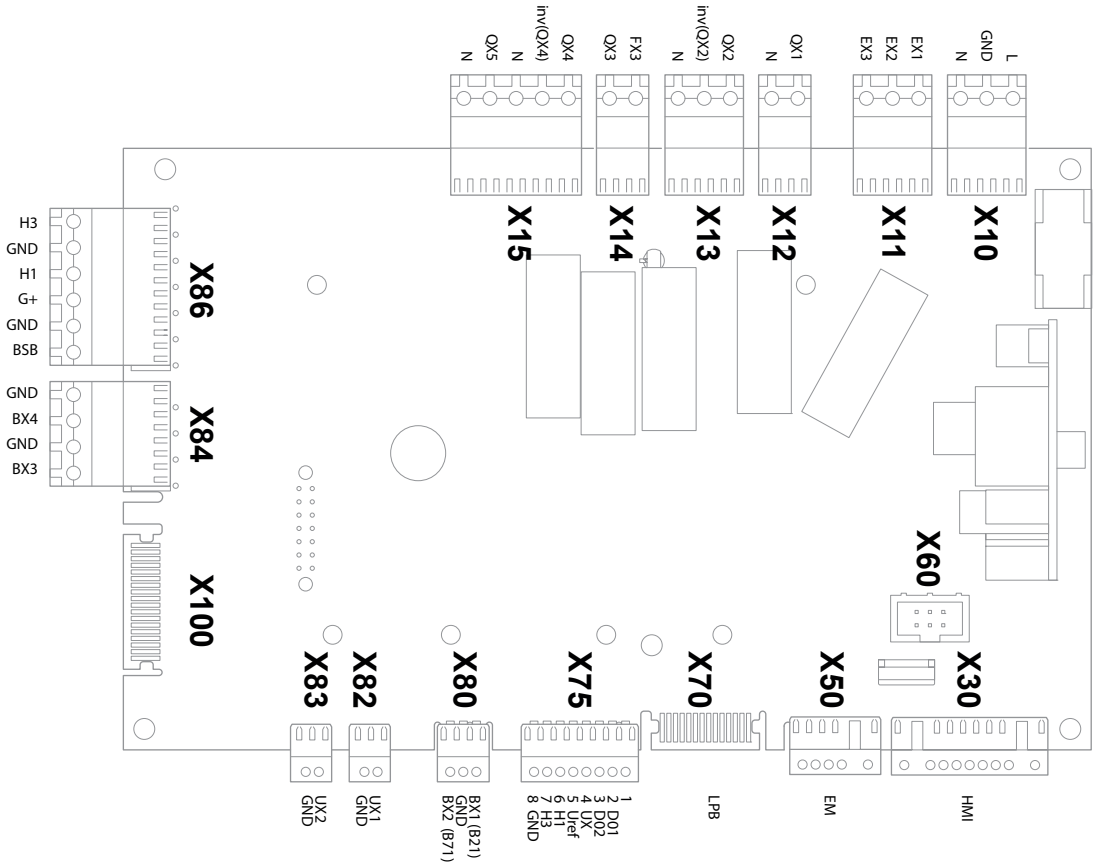

▶ Designation of terminals on the expansion card

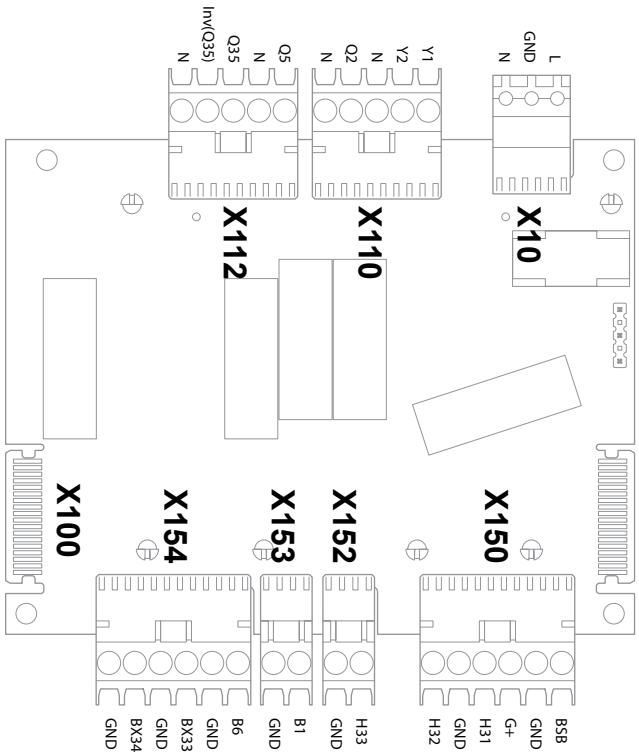

Quick-start procedure

Before switching on the hydraulic unit:

- Check the electric wiring.
- Check the refrigeration circuit and make sure the it has been gassed.
- Check the hydraulic circuit's pressure (1 to 2 bar), check that the heat pump has been bled, along with the rest of the installation.
- Make sure that ALL DIP SW on the interface board are OFF before starting up.

▶ Start-up check-list

▼ Before starting-up

	OK	Not compliant
Installation *("Installation", page 16)*		
Surface and ventilation of the room		
Visual checks Outdoor unit (see chapter *"Installation of the outdoor unit", page 17)*		
Location and fittings, condensate evacuation.		
Comply with distances from obstacles.		
Hydraulic checks Hydraulic unit (see chapter *"Installation of the hydraulic unit", page 20)*		
Connection of pipes, valves and pumps (heating circuit, DHW).		
Installation water volume (expansion vessel of adequate capacity?).		
No leaks.		
Main system pressure and degassing.		
Refrigeration connections and checks (see chapter *"Refrigeration connections", page 28)*		
Check the refrigeration circuits (sealing, no dust or humidity).		
Connections between units (pipe length, flare tightening torque...).		
Mechanical protection of refrigeration connections		
Installation of HP pressure gauges on the gas line (large tube).		
Pump down mandatory.		
Nitrogen leak test (~ 10 bar).		
Opening of refrigeration valves to outdoor unit.		
Filling hydraulic unit and pipes with refrigerant.		
Indicate on the label present on the outdoor unit, the amount of gas (Factory + additional filling)		
Electrical checks Outdoor unit (see chapter *"Outdoor unit", page 38)*		
Main power supply (230 V).		
Protection by rated circuit breaker.		
Cable dimensions.		
Earth connection.		
Electrical checks Hydraulic unit (see chapter *"Hydraulic unit", page 39)*		
Connection to outdoor unit (L, N, Earth).		
Sensors connection (positioning and connections).		
Distribution valve connections (boiler and DHW) and circulation pump.		
Power supply and protection of electric backup (option).		

▼ Starting-up

	OK	Not compliant
Quick Start Procedure (see chapter "Commissioning", page 48 and "Controller Menu", page 50)		
Close the installation's main circuit breaker (outdoor unit power supply) 6 hours before testing => Preheating of the compressor.		
Press the On/Off Switch => Initialisation takes several seconds.		
Operation of the heating circulation pump.		
Venting of the pump PAC (heating).		
Bleeding the installation.		
Outdoor unit starts after 4 mins.		
Configure Time, Date and Heating circuit, DHW period programs if different from the default values.		
Configure the hydraulic circuit.		
Adjust the heating gradient.		
Adjust the max flow setpoint.		
Outdoor unit checks		
Operation of fan(s), compressor.		
Current measurement.		
After several minutes measure the difference in air temperature.		
Check condensation and evaporation pressure/temperature.		
Hydraulic unit checks		
After 15 mins of operation.		
Primary water temp. difference.		
Operation of heating, boiler backup, etc.		
Control (see chapter "Controller Menu", page 50)		
Settings, maintenance, checks.		
Program the heating periods.		
Adjust the setpoints for the heating circuits if different from the default values.		
Setpoint display.		

Explanations of use		

The heat pump is ready for operation !

▶ Settings sheet

Setting	Description	Set to.	Menus
Preliminary settings			
20	language		*operator section*
1	hour / minutes		*time & date*
2	day / month		*time & date*
3	year		*time & date*
5700	installation config.		*configuration*
Heating circuit No. 1 if 2 circuits = the least warm one (e.g.: floor)			
710	comfort setpoint		*HC1 adjust.*
712	reduced setpoint		*HC1 adjust.*
720	heating curve slope		*HC1 adjust.*
741	flow temp setpoint max		*HC1 adjust.*
750	room influence		*HC1 adjust.*
790 / 791	optimis. at switch-on / off		*HC1 adjust.*
834	servomotor travel time		*HC1 adjust.*
850 / 851	floor drying		*HC1 adjust.*
Heating circuit No. 2 (with 2nd circuit option) = the warmest one (e.g.: radiators)			
1010	comfort setpoint		*HC2 adjust.*
1012	reduced setpoint		*HC2 adjust.*
1020	heating curve slope		*HC2 adjust.*
1041	flow temp setpoint max		*HC2 adjust.*
1050	room influence		*HC2 adjust.*
1090 / 1091	optimis. at switch-on / off		*HC2 adjust.*
1134	servomotor travel time		*HC2 adjust.*
1150 / 1151	floor drying		*HC2 adjust.*
Domestic Hot Water			
1610	nominal DHW temp. setpoint		*DHW*
1612	reduced DWH temp. setpoint		*DHW*
1620	DHW release		*DHW*
1640 to 1642	legionella cycle		*DHW*
5024	DHW switch-on differ.		*DHW tank*
5030	charging time limitation		*DHW tank*
5061	heater release		*DHW tank*

Setting	Description	Set to.	Menus
Boiler backup (with "Boiler" kit option)			
3700	OT.switch-on authoris.		*addit. gen.*
3705	swith-off delay		*addit. gen.*
Miscellaneous			
6420	input H33 function	1	*configuration*
6100	OT sensor correction		*configuration*
6120	frost protection on/off		*configuration*
6205	reset settings		*configuration*
6220	software version		*configuration*
6711	reset heat pump		*error*
Cooling (with "Cooling" kit option)			
5711	cooling unit	2 pipes	*configuration*
Faults (if a fault occurs, press"Info" key)			
No. 10	outdoor sensor		
No. 33	flow temp. sensor		
No. 44	return temp. sensor		
No. 50	DHW temp. sensor		
No. 60	room sensor 1		
No. 65	room sensor 2		
No. 105	maintenance message		
No. 121	HC1 flow T not reached		
No. 122	HC2 flow T not reached		
No. 127	leg. prot. T not reached		
No. 369	external fault (EX3)		
No. 370	outdoor unit connect error		
6711	reset heat pump		*error*
Heat pump			
2844	switch-off temp max		*heat pump*
2884	OT auth. to start elec. aux.		*heat pump*
2920	Pk day clear (EX1) rel / lock		*heat pump*
Swimming pool (with "swimming pool" kit option)			
2056	generator setpoint		*Sw pool*
Outdoor unit faults (see page 68***)***			

▶ Commissioning technical datasheet

Site		***Installer***	

Outdoor unit	Serial No.		***Hydraulic unit***	Serial No.	
	Model			Model	

Refrigerant type		***Refrigerant load***	kg

Checks				***Operating voltage & current on outdoor unit***		
Compliance with positioning distances				L/N	V	
Condensate evacuation correct				L/E	V	
Electric connections / connections tightness				N/E	V	
No GAS leaks (unit ID No.:)				Icomp	A	
Installation refrigeration connection correct (length m)						
Taken in operation when HOT						
Compressor discharge temperature		°C				
Liquid line temp.		°C				
Condensation temperature	HP = bar	°C	}	Under-cooling		°C
Tank water output temperature		°C	}	ΔCondensation Temp.		°C
Tank water input temperature		°C		ΔSecondary Temp.		°C
Evaporation temperature	BP = bar	°C				
Suction Temp.		°C	}	Overheating		°C
Battery air input temperature		°C	}	ΔEvaporation Temp.		°C
Battery air output temperature		°C	}	ΔBattery Temp.		°C

Hydraulic network on hydraulic unit						
Secondary system	Underfloor heating system		}	Circulation pump brand	Type	
	LT Radiators					
	Fan coils					
Domestic hot water; tank type						
Estimated water volume of secondary system		L				

Options & accessories					
Power supply for electric backup			Room sensor T75		
Correct location of room sensor			Wireless room sensor T78		
2 circuit kit					
Boiler connection kit			Details		
Cooling kit					

Control settings		
Configuration type		
Essential settings		

Instructions for the end user

Explain to the user how his installation operates, in particular the functions of the room sensor and the programmes accessible to them via the user interface.

Emphasise that a heated floor has significant inertia and that therefore any adjustments must be made gradually.

Also explain to the end user how to check the filling of the heating circuit.

End-of-life of the appliance

The appliances must be dismantled and recycled by a specialised service. The appliances must not, under any circumstances, be thrown out with household waste, bulky waste or at a tip.

At the end of its service life, please contact the installer or local representative to proceed with its dismantling and recycling.

This unit is identified by this symbol. It means that all electrical and electronic products must not be included in household waste.
A specific recycling system for this type of product has been set up in European Union countries (*), Norway, Iceland and Liechtenstein.
Do not try to dismantle this product yourself. It may have damaging effects on your health or on the environment.
Reprocessing of the refrigerant, lubricant and other parts may be performed by a qualified installer in compliance with the local and national legislation in force.
This unit must be recycled by a specialised service and in no case may it be thrown away with household waste, rubble or in a landfill.
Please contact your installer or local representative for more .
* Depending on the national regulations of each member state.

- This equipment complies with:
- Low Voltage Directive 2014/35/EC in accordance with NF EN 60335-1, NF EN 60335-2-40, NF EN 60529, NF EN 60529/A2 (IP) standards,
- Electromechanical Compatibility Directive 2014/30/EC,
- Machines Directive 2006/42/EC,
- Pressure Equipment Directive 2014/68/EC in accordance with NF EN 378-2 standard,
- Ecodesign Directive 2009/125/EC and regulation (EU) No 813/2013,
- regulation (EU) 2017/1369 setting a framework for energy labelling and repealing Directive 2010/30/EU.

- This appliance also complies with:
- decree No. 92-1271 (and its modifications) relating to certain refrigeration fluids used in refrigeration and air conditioning equipment.
- Regulation 517/2014 of the European Parliament on certain fluorinated greenhouse gases.
- the standards relating to the product and the testing methods used: Air-conditioners, refrigeration units and heat pumps with compressor driven by electric motor for heating and refrigeration EN 14511-1, 14511-2, 14511-3,14511-4, EN 14825.
- EN 12102-1 standard: determination of the sound power level

012

Keymark Certification :
012-SC0366-19 - Waterstage Split Comfort Series 5
012-SC0367-19 - Waterstage Split Comfort Series 6
012-SC0368-19 - Waterstage Split Comfort Series 8

Commissioning date:

Address of your heating installer or customer service.

Fujitsu General (Euro) GmbH
Fritz-Vomfelde-Strasse 26-32
40547 Düsseldorf - Germany